WINTERS

Since 1953

We're There.

PRODUCT CATALOGUE

www.winters.com

WINTERS INSTRUMENTS

MANUFACTURER OF INDUSTRIAL INSTRUMENTATION

Why Winters

1. Large and deep product offering

Allows access to many new and different customers

2. High quality products

Worry free installations with an extremely low defect rate

3. Five year warranty

Covering all instrumentation

4. Servicing all market segments

Covering both the industrial and commercial markets

5. High field support presence

A large number of Regional Sales Managers providing global coverage

6. Distributed globally

Global distribution in over 90 countries through 9 WIN sales and service offices

7. Distributor training events

Ensuring our partners are fully equipped to promote, sell and support our instrumentation products

8. Engineering team

Responding to technical RFQs and providing application know-how

9. Regular 3rd party factory audits

Customers and agencies verifying standards and certifications

10. Approvals

Adhering to higher standards: CSA, UL, FM, CE, CRN, 3A RoHS, ISO 9001

11. Distributor portal

All of our WIN tools at your convenience

12. UPC labelled product and packaging

Fast and simple product identification

13. Comprehensive website and App

Embracing mobile technology

14. Canada's Best Managed Companies Program Winner Since 2017

Recognition for innovation and sustained performance re-enforces Winters' commitment to continuous improvement

15. Global AMLs

Easier acceptance into industrial and commercial projects

16. StabiliZR™

Gauge dampening technology without glycerin filling

17. Strong R&D

Numerous new product launches

18. Platinum service

Front of the line service

Continuous product improvements may result in specifications being changed without notice. For updated information please call Winters.

StabilizR™
PC-ZR SERIES
www.winters.com
PFQ SERIES
PFP SERIES
DPG Series

Table of Contents

Project Highlights 4
Warranty 5
Winters Platinum Service 6
Repairs and Test Certificates 7
Custom Dials 8
How to Order Guide 9
Winters Approvals/Certifying Agencies 244
Pressure Conversion Table ..... Inside Back Cover

Selection Guides
Pressure Gauges 10
Diaphragm Seals 159
Thermometers 194

PRESSURE

Process Gauges
PPC Process Gauge 11
PRC Receiver Gauge 13
PSG Schaeffer Gauge 14
PTR Tamper Resistant Process Gauge 16

StabiliZR™ Gauges
PEM-ZR Economy StabiliZR™ Gauge ..... 18 **NEW**
PFP-ZR Premium Stainless Steel StabiliZR™ Gauge 21
PFQ-ZR StabiliZR™ Stainless Steel Gauge 25
PN2-ZR NACE StabiliZR™ Gauge - MR0175-2002 28
PPC-ZR StabiliZR™ Process Gauge 30

Industrial Gauges
P1S 100 Series Gauge 33
P3S 300 Series Gauge 36
PBC Forged Brass Case Gauge 39
PCC Colour Coded Gauge 42
PCT/PCT-LF Contractor/Lead Free Contractor Gauge ..... 44 **NEW**
PFP Premium Stainless Steel Liquid Filled Gauge 45
PFP Premium Stainless Steel Liquid Filled Gauge for Panel Mounting 51
PFQ/PFQ-LF Stainless Steel/Lead Free Stainless Steel Liquid Filled Gauge ..... 53 **NEW**
PN2 NACE Liquid Filled Gauge - MR0175-2002 64
PSC Safety Case Gauge 66
PTG Test Gauge 68
PTS Tube Stub Gauge 70

Economy Gauges
P9S 90 Series Gauge 72
P9U 90 Series Panel Mounted Gauge 75
PEM/PEM-LF Economy/Lead Free Economy Gauge ..... 78 **NEW**
PEU Economy Panel Mounted Gauge 81

Differential Gauges
PDT Differential Gauge 83
PDX Duplex Gauge 85
PFD WinAIR Differential Gauge ..... 87 **NEW**
High Static Pressure Differential Gauges
PPD Piston Gauge 89, 91
PRD Rolling Diaphragm Gauge 89, 92
PSD Small Convoluted Diaphragm Gauge 89, 93
PVD Convoluted Diaphragm Gauge 89, 94

Sanitary Gauges
PAG 3A Premium Pharmaceutical & Sanitary Gauge 95
PSQ 3A All-Purpose Quality Sanitary Gauge 97

Compressed Gas Gauges
PCG Compressed Gas Gauge 100
PRL Regulator Gauge 102
PSP Spiral Tube Gauge 104
PWL Welding Gauge 106

Special Application Gauges
DPG Digital Pressure Gauge 108
PAM Ammonia Gauge 109
PFE Sprinkler Gauge 112
PFG Refrigeration Gauge 113
PLP Low Pressure Gauge 115

Kits
PET/PET-LF Economy Test/Lead Free Economy Test Gauge ..... 118 **NEW**
PLT Low Pressure Test Kit 120
PTK Pressure and Temperature Kit 121

Table of Contents

Pressure Transmitters	LE1	OEM Transmitter	123
	LE3	General Purpose Transmitter	125
	LIM	Aggressive Media Transmitter	127
	LIS	Intrinsically Safe Transmitter	129
	LLP	Low Pressure Transmitter	131
	LM1	Anti-Clogging Submersible Transmitter	133
	LM6	All Stainless Steel Submersible Transmitter	134
	LM7	General Purpose Submersible Transmitter	135
	LMH	Hydraulic Transmitter	136
	LST	3A Sanitary Transmitter	138
	LTD	Differential Transmitter	139
	LTF	Flush Mount Transmitter	142
	LXP	Explosion Proof Transmitter	144
Pressure Switches	2WPS	General Purpose Pressure Switch	147
	3WPS	Industrial Pressure Switch	149
	4WPS	Low Pressure Diaphragm Pressure Switch	151
	5WPS	Differential Pressure Switch	154
	9WPS	Explosion Proof Compact Pressure Switch	156
Diaphragm Seals	D10	PVC 2-Piece Seal	160
	D15	Threaded Flush Mount Seal	161
	D20	Sanitary Seal	162
	D30	High Pressure Seal	163
	D40	Medium Duty Seal	164
	D44	Flanged Seal	165
	D46	Flanged Flush Mount Seal	169
	D70	Heavy Duty 2-Piece Industrial Seal	170
	D71	NACE 2-Piece Seal	172
	D81	Isolation Ring	174
	D85	In Line Flow Thru Seal	176
	D90	Saddle Weld Seal	177
Valves	NVA	Needle Valve (Straight Body, Hard Seat)	179
	NVA	Needle Valve (Angle Body, Hard Seat)	181
	NVA	Needle Valve (Straight Body, Soft Seat)	183
	NVA	Needle Valve (Multiport)	184
	BBV	Block & Bleed Valve Single Handle	186
	BBV	Block & Bleed Valve Two Handles	188
	BBV	Double Block & Bleed Valve	190
	SMV/SMV-LF	Mini Ball Valve/Lead Free Mini Ball Valve	192
	SNV/SNV-LF	Needle Valve/Lead Free Needle Valve	193
TEMPERATURE			
Thermometers	TAG	HVAC Gold Case Thermometer	195
	TAS/TAS-LF	Industrial/Lead Free Industrial 5” Thermometer	197
	TBM	Bi-Metal Thermometer	199
	TBT	HVAC Bi-Metal Thermometer	204
	TCT	Clamp-On Thermometer	205
	THR	HVAC Remote Reading Thermometer	206
	THS	Solar Digital Bi-Metal Thermometer	208
	TIM/TIM-LF	Industrial/Lead Free Industrial 9” Thermometer	209
	TMT	Surface Magnet Thermometer	211
	TNR	Food & Beverage Bi-Metal Thermometer	212
	TRR	Gas or Vapour Remote Reading Thermometer	213
	TSD	Industrial Solar Digital Thermometer	219
	TSW/TSW-LF	Hot Water/Lead Free Hot Water Thermometer	221
	TTD	Tridicator	223
Thermowells	TBR	Bi-Metal Threaded Thermowell	225
	TDF	Duct Flange	229
	TIW/TIW-LF	Industrial/Lead Free Industrial Thermowell	230
	TSN	Sanitary Thermowell	232
	TST	Tridicator Shut-off Thermowell	233
	TWF	Flanged Threaded Thermowell	234
	TWS	Socket Weld Bi-Metal Thermowell	235
	TWW	Weld-In Threaded Thermowell	236
ACCESSORIES			
	FIR	Isolation Ring Tees	237
	SAS	Adjustable Snubber	238
	SCT	Cooling Tower	239
	SOP	Over Pressure Protector	240
	SSN/SSN-LF	Snubber/Lead Free Snubber	241
	SSP	Syphon	242
	STP/STP-LF	Test Plug/Lead Free Test Plug	243

Project Highlights

Specified, Installed and Trusted - We're There

Aerospace & Transport

Air Canada	Canada
Canadian National Railway	Canada
US Air Force	USA

Automotive

Chrysler	Canada
General Motors (Paint Plant)	Canada
Hainan Automobile Group	China
Honda	Canada
Nissan	USA
Toyota	USA/Canada

Food & Beverage / Pharmaceutical

Catalent Pharma Solutions	USA
Coca-Cola	Puerto Rico
Heinz	Canada
Kellogg's	Canada

Government

Department of Defence	Canada
US Coast Guard	USA
US Defense Department	USA
US Navy	USA

HVAC

American University of Beirut	Lebanon
BCE Place	Canada
Burj Khalifa	UAE
Palm Jumairah	UAE
Pearl Qatar	Qatar
Princess Noura University	Saudi Arabia

Industrial

DuPont	USA
Jordan Bomine Plant	Jordan

Mining

Diavik Diamond Mine	Canada
Peñaquito Polymetallic Mine	Mexico
Teck Cominco	Canada

Oil & Gas

Devon Energy	Canada
Devon (Jackfish)	Canada
Saudi Aramco	Saudi Arabia
Shell Oil (Motiva)	USA
Suncor Energy	Canada
Suncor (Millennium)	Canada

Petrochemical

Fushun Petrochemical Company	China
Irving Oil Refinery	Canada
Nanjing DSM Petrochemical	China
Sinopec	China

Power Generation

Dayawan Nuclear Power Plant	China
Georgia Power	USA
Jebel Ali Power Station	UAE
Ontario Hydro	Canada
Ras Abu Fontas Power and Desalination	Qatar
Takoradi Thermal Power Station	Ghana
Wasit Power Station	UAE
Williams Energy Refinery	Canada

Pulp & Paper

Harmack & Neucel	Canada
Irving Paper	Canada
Tembec	Canada

Water / Waste Water Treatment

Ashbridges Bay	Canada
Capital Region	Canada
Chelmsford, MA Water Treatment Plant	USA
Dallas Water Treatment Plant	USA
Hartford Dist. Water Pollution Control Facility	USA
SEWA Sarjah	UAE

5-Year Warranty

A 5-year warranty applies to all instrumentation and instrumentation accessories.

Winters Instruments' products are warranted for a stated period of time (see above) after date of purchase against manufacturing and materials defects. Any product which is found by Winters to be defective will be replaced at Winters' discretion. Winters' product warranty does not cover product defects resulting from improper product selection, misuse or misapplication except as specifically set forth in this warranty. Winters Instruments makes no representation or Warranty of any kind, whether expressed or implied, to Purchaser or any other person with respect to any of the products. Without limiting the generality of the preceding sentence, winters instruments disclaims the implied Warranties of merchantability and fitness for a particular purpose. Any liability from Winters to Purchaser or any other person or entity pursuant to this Warranty, whether for a claim in tort, for breach of contract or otherwise, shall not exceed the purchase price of the Product giving rise to such liability. Winters shall in no event have any liability to Purchaser or any other person or entity for any consequential, indirect, punitive or special damages (including, without limitation, lost profits) pursuant to this Warranty or pursuant to its sale of the Products, even if the possibility of such damages could have been foreseen by Winters Instruments.

Winters Platinum Service

An expedited service that moves orders to the front of the line.

Both manufacturing and service orders will be expedited through our system. Orders manufactured in North America will be completed within **48 hours** and non-North American manufactured orders will be completed within **two weeks**.

Platinum Service applies to most products. Contact Winters or a Winters distributor for more details.

Winters Platinum Service is available for new and existing orders. All Platinum Service orders must be approved by a Winters representative prior to a purchase order being issued (as order size and parts availability may preclude an order from Platinum Service). Purchase orders issued more than 3 weeks after original quote may no longer qualify for Platinum Service. Changes made to Platinum Service orders already placed may void the service. If a Platinum Service order is not shipped in the time quoted the premium fee may be waived by Winters. Freight is not included.

Repairs

Features:

- Full repair service for pressure & temperature instruments and diaphragm seals
- Non-Winters products can also be repaired

Applications:

- Where cost savings justify repairing rather than replacing

How to order:

Please contact our customer service department for your repair order code. Send in your product (freight prepaid) to your nearest Winters location. A written estimate will be faxed or emailed to you before any work is done.

Test Certificates

Features:

- Winters will certify the accuracy of a pressure gauge, thermometer or pressure switch with a National Standards Council test certificate
- Certificates are traceable to the National Institute of Standards and Technology (NIST)
- Certificates may be registered online for renewal reminders

Applications:

- Where a formal test certificate is required
- For certification with the ISO 9000 process

How to order:

Please contact our customer service department for your order code.

Custom Dials

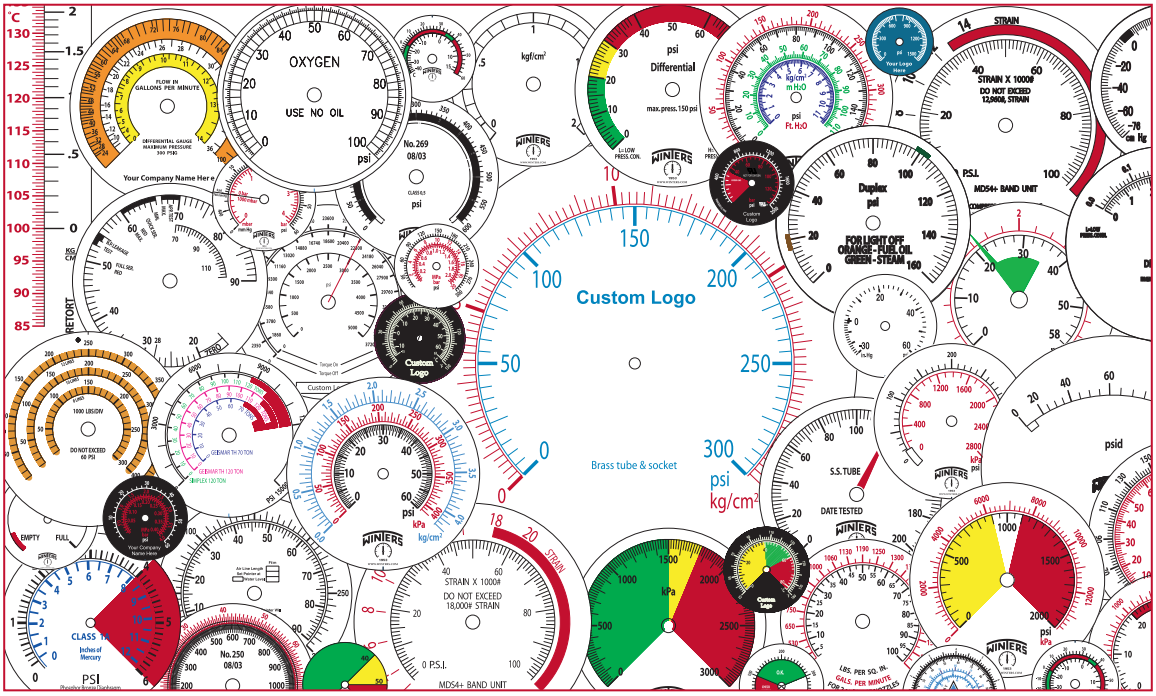

Customize Your Instrumentation

- Available for all makes and models of pressure and temperature instrumentation
- All colours are available
- All dials are custom manufactured to meet your specifications
- Available on new or repaired instruments
- Available for dry or liquid-filled instruments
- Emergency same-day custom dial manufacturing is available

Available Options:

- Colour safety zones
- Warning identification
- Tons on Ram scales
- Feet of Water scales
- Bar scales
- Kg/cm² scales
- Receiver gauge scales
- mm of H_2O scales
- Custom logos

More available. Please call us with your requirements.

Applicable to OEM Requirements

- Where easy-to-read, highly visible warning zones are required
- Non-standard custom measurement scales
- Replacement of damaged or outdated dials
- For time-sensitive dial requirements

WinBRIGHT Dials (Available on PFP, PFP-ZR, PPC, PPC-ZR Series Gauges):

- WBYG option for the reflective, fluorescent yellow-green dial
- WBY option for the reflective, fluorescent yellow dial
- WBFY option for the fluorescent yellow dial
- WBO option for the reflective orange dial
- WBW option for the reflective white dial
- WBG option for the glow-in-the-dark white dial

Quick Tips:

- Review our pressure gauge, thermometer and diaphragm seal selection guides
- Take a moment to review and learn how to read our order code matrix
- If options are available and required, attach the option suffix code to the end of the product order code
- If a scale change is required (i.e. change from standard offering to bar scale), attach the scale code to the end of the product order code

Order Code Matrix (for standard, in stock products):

Each product series has an order code matrix listed after the product specifications. Locate the column of order codes that lists your desired dial size, connection size, connection location and wetted material. Then follow that column downward until it intersects with the row of your choice.

Example:

Order Codes

Dial Size	3.5" (90mm)		4" (100mm)	4.5" (115mm)		6" (150mm)	
Case Material	Steel		Steel	Aluminum		Steel	Aluminum
Connection	Bottom	Centre Back	Centre Back	Bottom	Lower Back	Bottom	Lower Back
30" Hg Vac/kPa	**P1S234**	*P1S560*	P1S460	P1S410	*P1S430*	P1S250	P1S475
30"/0/15 psi/kPa	P1S230	*P1S568*	P1S468	P1S411	*P1S431*	P1S251C	P1S476
30"/0/30 psi/kPa	[illegible]	*P1S569*	P1S469	**P1S412**	*P1S432*	P1S252C	P1S477
30"/0/60 psi/kPa	**P1S232**	*P1S570*	P1S470	P1S413	*P1S433*	P1S259C	P1S478
30"/0/100 psi/kPa	P1S233	*P1S571*	P1S471	P1S414	*P1S434*	P1S253C	[illegible]
30"/0/160 psi/kPa	**P1S229**	*P1S572*	P1S472	P1S416	*P1S436*	[illegible]	[illegible]
30"/0/200 psi/kPa	-	*P1S573*	-	[illegible]	[illegible]	[illegible]	[illegible]
30"/0/300 psi/kPa	P1S227	*P1S574*	[illegible]	[illegible]	[illegible]	[illegible]	[illegible]
0/15 psi/kPa	**P1S228**	[illegible]	[illegible]	[illegible]	[illegible]	[illegible]	[illegible]
0/30 psi/kPa	[illegible]	[illegible]	[illegible]	[illegible]	[illegible]	[illegible]	[illegible]

Scale Codes

R1 = psi
R2 = kPa
R3 = kg/cm^2
R4 = cm of H_2O
R5 = ft of H_2O
R6 = in of Hg
R7 = mm of Hg
R8 = in of H_2O
R9 = oz/in^2
R10 = atmosphere
R11 = bar
R12 = mbar
R13 = MPa
R14 = mH_2O
R15 = mmH_2O
R16 = Pa

If a scale change is required (i.e. change from standard offering to bar scale), attach the scale code to the end of the product order code

Options

Some options include:

Maximum Indicating Pointer	Stainless Steel Tag
Front Flange	Safety Glass
Back Flange	Capillary
U-Clamp	Thermowell Cap and Chain
Red Hand Setpoint	StabiliZR™ Movement
Rubber Boot	Filling

More options available. See individual catalogue pages or call us with your requirements.

Pressure Gauge Selection Guide

Catalogue Page	Series	Dial Size									Ranges (Pressure)							Case Material							Wetted Parts							Connection Size						Connection Location			Accuracy								
		1.5" & under	2"	2.5"	3.5"	4"	4.5"	6"	8.5"	10"	30" Hg Vac	Compound	15" H_2O - 200" H_2O	15" H_2O Vac - 200" H_2O Vac	15 - 300 psi	400 - 600 psi	1,000 - 5,000 psi	6,000 - 20,000 psi	Steel	Plastic	Phenolic	Stainless Steel	Fluid-fillable Case	Brass	Aluminum	Aluminum	Brass	Lead Free Brass	Stainless Steel	Carbon Steel	1/8" NPT	1/4" NPT	7/16"-20 SAE	1/2" NPT	3/4" NPT	Tri-Clamp®	Bottom Mount	Centre Back	Lower Back	In Line	5% of full scale value	3-2-3% (Grade B)	2.5% of full scale value	2% of full scale value	2-1-2% (Grade A)	1.5% of full scale value	1% (Grade 1A)	0.75% of full scale value	0.5% and better (2A - 4A)	RoHS compliant
108	DPG Digital Pressure Gauge			X							X	X			X	X	X	X		X									X			X					X										X			X
33	P1S 100 Series Gauge				X	X	X	X			X	X			X	X	X		X						X		X					X					X	X	X								X			
36	P3S 300 Series Gauge						X	X	X	X	X	X			X	X	X	X							X		X		X			X		X			X		X										X	
72	P9S 90 Series Gauge	X	X	X	X						X	X			X	X			X								X				X	X					X	X							X					
75	P9U 90 Series Gauge	X	X	X	X						X				X	X			X								X				X	X						X							X					
95	PAG 3A Premium Pharmaceutical & Sanitary Gauge			X		X					X	X			X	X						X	X						X							X	X	X	X									X		X
109	PAM Ammonia Gauge			X	X	X		X	X	X	X	X							X			X	X		X				X			X					X	X	X			X				X	X		X	X
39	PBC Forged Brass Case Gauge			X		X					X	X			X	X	X	X					X	X			X					X		X			X	X								X	X			
42	PCC Colour Coded Gauge					X					X	X			X	X	X	X		X			X				X		X			X		X			X										X			
100	PCG Compressed Gas Gauge	X	X												X	X	X		X								X			X	X						X	X				X					X			
44	PCT Contractor Gauge						X				X	X			X	X	X					X					X					X					X										X			
44	PCT-LF Lead Free Contractor Gauge						X				X	X			X	X	X					X						X				X					X										X			
83	PDT Differential Gauge						X	X							X	X									X		X		X			X					X		X								X			
85	PDX Duplex Gauge						X	X							X	X									X		X		X			X					X		X								X			
78	PEM Economy Gauge	X	X	X		X					X	X			X	X	X		X		X						X				X	X					X	X				X								
78	PEM-LF Lead Free Economy Gauge	X	X	X		X					X	X			X	X	X		X		X							X			X	X					X	X				X								
18	PEM-ZR Economy StabiliZR™ Gauge	X	X	X		X					X	X			X	X	X		X		X						X				X	X					X	X				X								
118	PET Economy Test Gauge		X	X											X				X								X								X		X					X								
118	PET-LF Lead Free Economy Test Gauge			X											X				X									X							X		X					X								
81	PEU Economy Panel Mounted Gauge	X	X	X							X				X				X								X				X	X						X				X								
87	PFD WinAIR Differential Gauge					X						X	X	X											X	X					X						X													
112	PFE Sprinkler Gauge				X										X					X								X				X					X			X		X			X					
113	PFG Refrigeration Gauge			X		X		X			X	X			X	X			X	X											X	X					X	X						X			X			
45	PFP Premium Stainless Steel Liquid Filled Gauge			X		X	X	X			X	X			X	X	X	X				X	X				X		X			X		X			X	X	X							X	X			X
51	PFP Premium Stainless Steel Liquid Filled Gauge for Panel Mounting			X							X	X			X	X	X	X				X	X						X			X							X							X				X
21	PFP-ZR Premium Stainless Steel StabiliZR™ Gauge			X		X		X			X	X			X	X	X	X				X							X			X		X			X	X	X							X	X			X
53	PFQ Stainless Steel Liquid Filled Gauge	X	X	X		X					X	X			X	X	X	X				X	X				X		X		X	X	X	X			X	X					X			X			X
53	PFQ-LF Lead Free Stainless Steel Liquid Filled Gauge			X		X					X	X			X	X	X	X				X						X				X					X	X								X			
25	PFQ-ZR Stainless Steel StabiliZR™ Gauge			X							X	X			X	X	X	X				X					X					X					X	X									X		
115	PLP Low Pressure Gauge			X		X	X	X					X	X					X			X			X		X		X			X					X	X				X								
64	PN2 NACE Gauge - MR0175-2002					X		X			X	X			X	X	X	X				X	X						X			X		X			X	X									X			X
28	PN2-ZR NACE StabiliZR™ Gauge - MR0175-2002					X					X	X			X	X	X	X				X							X					X			X										X			X
11	PPC Process Gauge						X				X	X			X	X	X	X			X		X				X		X			X		X			X		X										X	X
30	PPC-ZR StabiliZR™ Process Gauge						X				X	X			X	X	X	X			X						X		X			X		X			X		X										X	X
91	PPD Piston (High Static Pressure Differential)			X	X		X								X					X					X		X		X			X		X			X	X		X				X						
13	PRC Receiver Gauge						X								X						X						X		X			X		X			X		X										X	
92	PRD Rolling Diaphragm (High Static Pressure Differential)			X											X					X									X			X								X	X									
102	PRL Regulator Gauge	X	X								X				X	X	X					X							X		X	X					X	X					X							X
66	PSC Safety Case Gauge					X	X	X			X	X			X	X	X					X	X						X			X					X										X		X	X
93	PSD Small Convoluted Diaphragm (High Static Pressure Differential)			X	X		X								X					X					X		X		X		X	X					X	X		X				X						
14	PSG Schaeffer Gauge					X		X					X		X							X							X					X			X									X				
104	PSP Spiral Tube Gauge	X													X	X	X							X			X				X						X					X								
97	PSQ 3A Quality Sanitary Gauge			X		X					X	X			X	X	X					X							X							X	X	X	X							X	X			X
68	PTG Test Gauge					X		X			X				X	X	X	X				X					X		X			X		X			X												X	
16	PTR Tamper Resistant Process Gauge						X								X	X	X				X								X					X			X										X			
70	PTS Tube Stub Gauge			X							X	X			X	X	X					X	X						X			X					X	X								X			
94	PVD Convoluted Diaphragm (High Static Pressure Differential)				X		X						X							X					X		X		X			X					X	X		X	X			X						
106	PWL Welding Gauge	X	X	X											X	X	X							X			X				X	X					X					X								

Note: When selecting a pressure gauge, always refer to ASME B40.100 (2013)

1. Optional Hinged Case
2. Optional Flush Mounting Ring

Note: RoHS applies to SS and Monel® internals only

Description & Features:

- Solid phenolic front and polypropylene pressure relief back safety case
- Field liquid-fillable (bottom connection only)
- ±0.5% accuracy
- Stainless steel full rotary movement for longer life
- Micrometer adjustable pointer for ease in calibration
- Under and overload stops
- 316L stainless steel, brass, Monel® wetted parts
- Restricted orifice standard on dual scale (optional on single scale)
- ASME B40.100 compliant
- CRN registered
- 5 year warranty

Applications:

- Ideally suited for process, chemical, petroleum and power industries
- Suitable for non-clogging corrosive media
- Used where operator safety is a requirement
- Processes where pulsation and vibration exist (with liquid filling)

Specifications	Stainless Steel Internals	Brass Internals
Dial	4.5” (115mm) white aluminum with black and red markings	4.5” (115mm) white aluminum with black and red markings
Case	Black phenolic with pressure relief back, solid front, integral back flange	Black phenolic with pressure relief back, solid front, integral back flange
Solid Wall	Phenolic	Phenolic
Pressure Relief Back	Polypropylene	Polypropylene
Window	Polycarbonate	Polycarbonate
Ring	Phenolic	Phenolic
Pointer	Aluminum, anodized black, micrometer adjustable	Aluminum, anodized black, micrometer adjustable
Socket	316L SS	OT 58 brass
Connection	1/4” NPT or 1/2” NPT standard, bottom or back	1/4” NPT or 1/2” NPT standard, bottom or back
Bourdon Tube	316L SS, drawn seamless	Phosphor bronze
Movement	304 SS with under and overload stops	304 SS with under and overload stops
Gasket Materials	Silicone (FKM option)	Silicone (FKM option)
Welding	TIG	Silver alloy
Over-pressure Limit	25% for pressures below 1,500 psi (10,341 kPa), 15% for pressures 1,500 psi to 8,700 psi (10,341 kPa to 59,984 kPa), 10% for pressures above 8,700 psi (59,984 kPa)	25% for pressures below 1,500 psi (10,341 kPa), 15% for pressures 1,500 psi to 8,700 psi (10,341 kPa to 59,984 kPa), 10% for pressures above 8,700 psi (59,984 kPa)
Working Pressure	Maximum 75% of full scale value	Maximum 75% of full scale value
Ambient Temperature	Dry: -40°F to 250°F (-40°C to 120°C) Glycerin Filled: -4°F to 150°F (-20°C to 65°C)	Dry: -40°F to 250°F (-40°C to 120°C) Glycerin Filled: -4°F to 150°F (-20°C to 65°C)
Process Temperature	-40°F to 250°F (-40°C to 120°C)	-40°F to 150°F (-40°C to 65°C)
Accuracy	±0.5% ANSI/ASME Grade 2A	±0.5% ANSI/ASME Grade 2A
Enclosure Rating	IP65	IP65
Warning (brass internals only)	N/A	**WARNING:** This product can expose you to chemicals including lead, which is known to the State of California to cause cancer and birth defects or other reproductive harm. For more information go to www.P65Warnings.ca.gov.

Monel® is a registered trademark of Inco Alloys International

Single Scale Order Codes (products in bold are normally stock in North America)

Connection	1/4" Bottom	1/4" Back (LB)	1/2" Bottom	1/2" Back (LB)
Socket, Tube	SS			
30" Hg Vac	PPC5040R1	PPC5340R1	PPC5060R1	PPC5460R1
30"/0/15 psi	PPC5130R1	PPC5330R1	PPC5140R1	PPC5440R1
30"/0/30 psi	PPC5131R1	PPC5331R1	PPC5141R1	PPC5441R1
30"/0/60 psi	PPC5132R1	PPC5332R1	PPC5142R1	PPC5442R1
30"/0/100 psi	PPC5133R1	PPC5333R1	PPC5143R1	PPC5443R1
30"/0/160 psi	PPC5134R1	PPC5334R1	PPC5144R1	PPC5444R1
30"/0/200 psi	PPC5135R1	PPC5335R1	PPC5145R1	PPC5445R1
30"/0/300 psi	PPC5136R1	PPC5336R1	PPC5146R1	PPC5446R1
0/15 psi	PPC5041R1	PPC5341R1	PPC5061R1	PPC5461R1
0/30 psi	PPC5042R1	PPC5342R1	**PPC5062R1**	PPC5462R1
0/60 psi	PPC5043R1	PPC5343R1	**PPC5063R1**	PPC5463R1
0/100 psi	**PPC5044R1**	PPC5344R1	**PPC5064R1**	PPC5464R1
0/160 psi	PPC5045R1	PPC5345R1	**PPC5065R1**	PPC5465R1
0/200 psi	PPC5046R1	PPC5346R1	**PPC5066R1**	PPC5466R1
0/300 psi	PPC5047R1	PPC5347R1	**PPC5067R1**	PPC5467R1
0/400 psi	PPC5048R1	PPC5348R1	PPC5068R1	PPC5468R1
0/600 psi	PPC5049R1	PPC5349R1	**PPC5069R1**	PPC5469R1
0/800 psi	PPC5058R1	PPC5358R1	PPC5078R1	PPC5478R1
0/1,000 psi	PPC5050R1	PPC5350R1	PPC5070R1	PPC5470R1
0/1,500 psi	PPC5051R1	PPC5351R1	PPC5071R1	PPC5471R1
0/2,000 psi	PPC5052R1	PPC5352R1	PPC5072R1	PPC5472R1
0/3,000 psi	PPC5053R1	PPC5353R1	**PPC5073R1**	PPC5473R1
0/5,000 psi	PPC5054R1	PPC5354R1	PPC5074R1	PPC5474R1
0/6,000 psi	PPC5199R1	-	PPC5178R1	-
0/10,000 psi	PPC5055R1	PPC5355R1	PPC5075R1	PPC5475R1
0/15,000 psi	PPC5056R1	PPC5356R1	PPC5076R1	PPC5476R1
0/20,000 psi	PPC5057R1	PPC5357R1	PPC5077R1	PPC5477R1

Note: Restrictor screws are not standard on single scale gauges

Other ranges and connection sizes available upon request. For scale change, refer to How to Order Guide for scale codes.

Option suffix:
FMR = Flush mounting ring
G = Glycerin (bottom connection only)
HCSF = Solid front hinged case (back connection only)
MAXI45 = 4.5" (115mm) Maxi pointer
MS = Monel® tube and socket
REST = Restrictor Screw (psi only)
SG-45 = Safety glass
SF45 = Silicone fill (bottom connection only)

For Win**BRIGHT** dial options refer to Custom Dials

Dual Scale Order Codes (products in bold are normally stock in North America)

Connection	1/4" Bottom	1/4" Back (LB)	1/4" Bottom	1/4" Back (LB)	1/2" Bottom	1/2" Back (LB)	1/2" Bottom	1/2" Back (LB)
Socket, Tube	Brass		SS		Brass		SS	
30" Hg Vac/kPa	PPC5080	PPC5280	PPC5040	PPC5340	-	-	PPC5060	PPC5460
30"/0/15 psi/kPa	**PPC5120**	PPC5220	PPC5130	PPC5330	-	-	PPC5140	PPC5440
30"/0/30 psi/kPa	PPC5121	PPC5221	PPC5131	PPC5331	-	-	PPC5141	PPC5441
30"/0/60 psi/kPa	PPC5122	PPC5222	PPC5132	PPC5332	-	-	PPC5142	PPC5442
30"/0/100 psi/kPa	PPC5123	PPC5223	PPC5133	PPC5333	-	-	PPC5143	PPC5443
30"/0/160 psi/kPa	PPC5124	PPC5224	PPC5134	PPC5334	-	-	PPC5144	PPC5444
30"/0/200 psi/kPa	PPC5125	PPC5225	PPC5135	PPC5335	-	-	PPC5145	PPC5445
30"/0/300 psi/kPa	PPC5126	PPC5226	PPC5136	PPC5336	-	-	PPC5146	PPC5446
0/15 psi/kPa	**PPC5081**	PPC5281	PPC5041	PPC5341	-	-	PPC5061	PPC5461
0/30 psi/kPa	PPC5082	PPC5282	PPC5042	PPC5342	-	-	**PPC5062**	PPC5462
0/60 psi/kPa	PPC5083	PPC5283	PPC5043	PPC5343	-	-	**PPC5063**	PPC5463
0/100 psi/kPa	**PPC5084**	PPC5284	**PPC5044**	PPC5344	-	-	**PPC5064**	PPC5464
0/160 psi/kPa	**PPC5085**	PPC5285	PPC5045	PPC5345	-	-	**PPC5065**	PPC5465
0/200 psi/kPa	**PPC5086**	PPC5286	**PPC5046**	PPC5346	-	-	**PPC5066**	PPC5466
0/300 psi/kPa	**PPC5087**	PPC5287	PPC5047	PPC5347	-	-	**PPC5067**	PPC5467
0/400 psi/kPa	PPC5088	PPC5288	PPC5048	PPC5348	-	-	PPC5068	PPC5468
0/600 psi/kPa	**PPC5089**	PPC5289	PPC5049	PPC5349	-	-	**PPC5069**	PPC5469
0/800 psi/kPa	PPC5099	PPC5299	PPC5058	PPC5358	PPC5188	PPC5198	PPC5078	PPC5478
0/1,000 psi/kPa	PPC5098	PPC5298	PPC5050	PPC5350	PPC5090	PPC5290	**PPC5070**	PPC5470
0/1,500 psi/kPa	-	-	PPC5051	PPC5351	PPC5091	PPC5291	PPC5071	PPC5471
0/2,000 psi/kPa	-	-	PPC5052	PPC5352	PPC5092	PPC5292	**PPC5072**	PPC5472
0/3,000 psi/kPa	-	-	PPC5053	PPC5353	PPC5093	PPC5293	PPC5073	PPC5473
0/5,000 psi/kPa	-	-	PPC5054	PPC5354	PPC5094	PPC5294	PPC5074	PPC5474
0/6,000 psi/kPa	PPC5199	-	PPC5158	-	PPC5398	-	PPC5178	-
0/10,000 psi/kPa	-	-	PPC5055	PPC5355	PPC5095	PPC5295	PPC5075	PPC5475
0/15,000 psi/kPa	-	-	PPC5056	PPC5356	PPC5096	PPC5296	PPC5076	PPC5476
0/20,000 psi/kPa	-	-	PPC5057	PPC5357	PPC5097	PPC5297	PPC5077	PPC5477

4.5” Bottom Connection

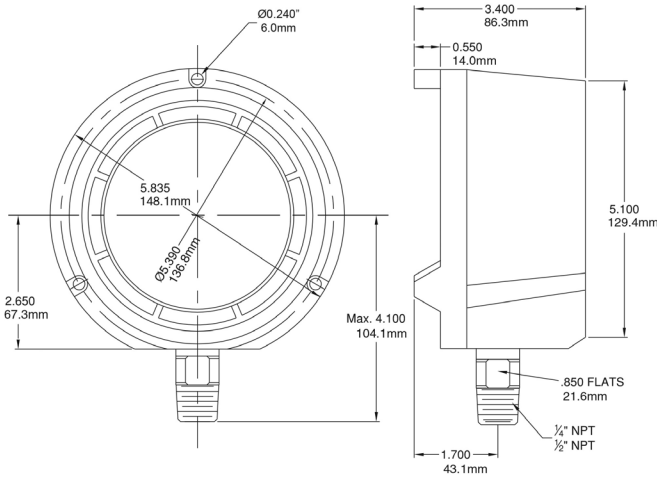

4.5” Back Connection

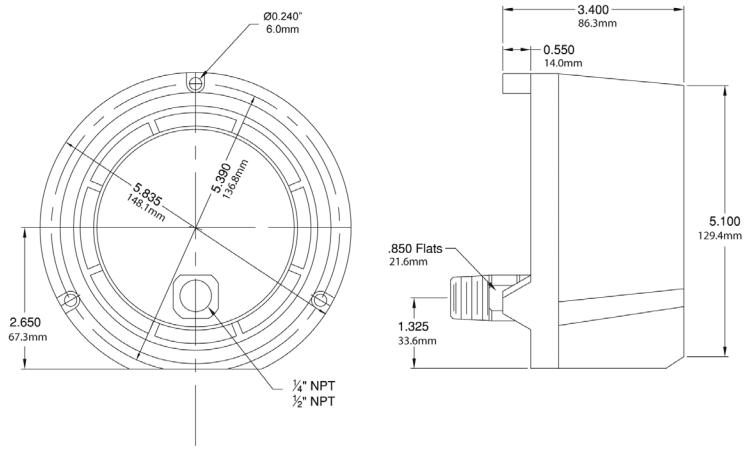

PRC Receiver Gauge

Description & Features:

- High quality gauge designed to work with a pneumatic transmitter or controller
- 3-15 psi with a variety of receiver ranges
- 316 stainless steel or brass wetted parts
- ASME B40.100 compliant
- CRN registered
- 5 year warranty

Applications:

- Works in conjunction with valves and transmitters to indicate changes in pressure, temperature, flow, level, or other measured proportional variables

Order Codes

Connection	1/4” Bottom	1/4” Back	1/4” Bottom	1/4” Back
Socket, Tube	Brass		SS	
3/15 psi/0-100%	PRC5081REC	PRC5281REC	PRC5041REC	PRC5341REC
3/27 psi/0-100%	PRC5082REC	PRC5283REC	PRC5042REC	PRC5342REC

PSG Schaeffer Gauge

Description & Features:

- A combination pressure gauge and diaphragm seal forming one unique instrument that measures low pressures where protection from the process media is required
- Bottom connection only
- All stainless steel construction
- A variety of materials available
- ASME B40.100 compliant
- CRN registered
- 5 year warranty

Applications:

- Used for low pressure corrosive media where diaphragm seal protection is needed
- Processes where low or high temperature will affect seal fill fluid

Specifications	
Dial	4” (100mm), 6” (150mm) white aluminum with black markings
Case	304 SS
Upper Flange	SS (neck and base movements)
Lower Flange	316L SS bottom connection
Lens	Acrylic
Connection	1/2” NPTM bottom (female optional)
Diaphragm Element	316 SS, 316 SSI PTFE lined, (Tantalum option)
Movement	All SS - Push rod / connecting link and segment
Pointer	Adjustable pointer - aluminum
Wetted Parts	316 SS (other materials available upon request)
Ambient Temperature	-13°F to 150°F (-25°C to 65°C)
Process Temperature	212°F (100°C) Maximum
Accuracy	±1.5% of full scale value
Enclosure Rating	IP54

Single Scale Order Codes

Dial Size	4” (100mm)	6” (150mm)
Connection	1/2” Bottom	
0/10” water/oz	PSG40105R1	PSG60105R1
0/30” water/oz	PSG40305R1	PSG60305R1
0/60” water/oz	PSG40605R1	PSG60605R1
0/100” water/oz	PSG401005R1	PSG601005R1
0/160” water/oz	PSG401605R1	PSG601605R1
0/200” water/oz	PSG402005R1	PSG602005R1
0/300” water/oz	PSG403005R1	PSG603005R1
0/10 psi	PSG4105R1	PSG6105R1
0/15 psi	PSG4155R1	PSG6155R1
0/30 psi	PSG4305R1	PSG6305R1
0/60 psi	PSG4605R1	PSG6605R1
0/100 psi	PSG41005R1	PSG61005R1
0/160 psi	PSG41605R1	PSG61605R1
0/200 psi	PSG42005R1	PSG62005R1
0/300 psi	PSG43005R1	PSG63005R1

Other ranges and connection sizes available upon request. For scale change, refer to How to Order Guide for scale codes. **For options, attach suffix to end of order code: i.e. PSG41005R1-SG-4 for SAFETY GLASS.**

Option suffix:
SG-4 = 4” (100mm) Safety glass lens
SG-6 = 6” (150mm) Safety glass lens

Dual Scale Order Codes

Dial Size	4" (100mm)	6" (150mm)
Connection	1/2" Bottom	
0/10" water/oz	PSG40105	PSG60105
0/30" water/oz	PSG40305	PSG60305
0/60" water/oz	PSG40605	PSG60605
0/100" water/oz	PSG401005	PSG601005
0/160" water/oz	PSG401605	PSG601605
0/200" water/oz	PSG402005	PSG602005
0/300" water/oz	PSG403005	PSG603005
0/10 psi/kPa	PSG4105	PSG6105
0/15 psi/kPa	PSG4155	PSG6155
0/30 psi/kPa	PSG4305	PSG6305
0/60 psi/kPa	PSG4605	PSG6605
0/100 psi/kPa	PSG41005	PSG61005
0/160 psi/kPa	PSG41605	PSG61605
0/200 psi/kPa	PSG42005	PSG62005
0/300 psi/kPa	PSG43005	PSG63005

Other ranges and connection sizes available upon request. For scale change, refer to How to Order Guide for scale codes. **For options, attach suffix to end of order code: i.e. PSG41005-SG-4 for SAFETY GLASS.**

Option suffix:
SG-4 = 4" (100mm) Safety glass lens
SG-6 = 6" (150mm) Safety glass lens

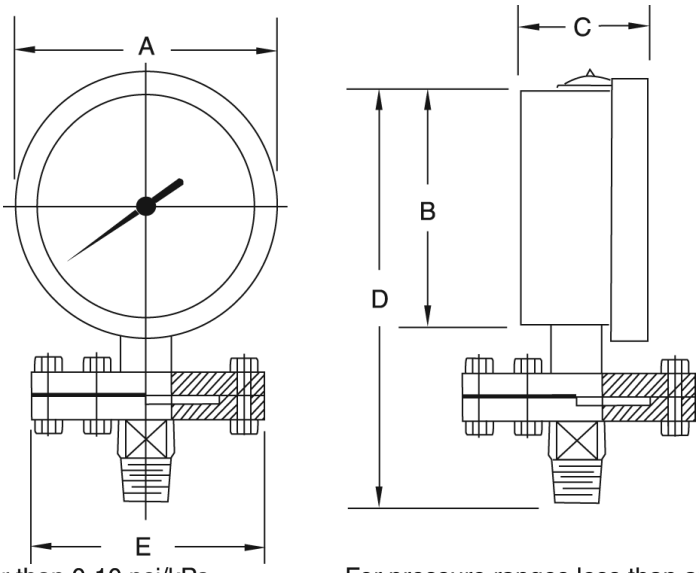

For pressure ranges greater than 0-10 psi/kPa

Case Dia.	Flange Dia.	A	B	C	D	E
4" / 100 mm	4" / 100 mm	4.43" / 112	3.90" / 99	2.16" / 55	6.99" / 177	3.86" / 98
6" / 150 mm	4" / 100 mm	6.10" / 155	5.51" / 140	2.20" / 56	6.99" / 177	3.86" / 98

For pressure ranges less than and equal to 10 psi/kPa

Case Dia.	Flange Dia.	A	B	C	D	E
4" / 100 mm	6" / 150 mm	4.43" / 112	3.90" / 99	2.16" / 55	6.99" / 177	6.10" / 155
6" / 150 mm	6" / 150 mm	6.10" / 155	5.51" / 140	2.20" / 56	6.99" / 177	6.10" / 155

PTR Tamper Resistant Process Gauge

Description & Features:

- Solid front, pressure relief back, welded to a 316L stainless steel one-piece diaphragm seal body
- 316L stainless steel diaphragm for use on most corrosive media
- Permanently enclosed silicone filled system
- Field-fillable gauge
- Orifice restrictor available for severe pulsation
- Pin stop at 6 o'clock available
- ASME B40.100 compliant
- CRN registered
- 5 year warranty on gauge and seal

Applications:

- Process industry where tamper-resistant gauge/seal is required to protect against maintenance errors in the field
- Suited for installations in process, oil and gas, petrochemical and chemical industries
- Tamper resistant construction controls leaks and protects against field errors

Specifications - Gauge	
Dial	4.5" (115mm) white aluminum with black and red markings
Case	Black phenolic with pressure relief back, solid front, integral back flange
Solid Wall	Phenolic
Pressure Relief Back	Polypropylene
Window	Polycarbonate
Ring	Phenolic
Pointer	Aluminum, anodized black, micrometer adjustable
Socket	316L SS
Bourdon Tube	316L SS, drawn seamless
Movement	304 SS with protective under and overload stops
Gasket Materials	Silicone (FKM option)
Welding	TIG
Over-pressure Limit	25% for pressures up to 1,450 psi (9,998 kPa), 15% for pressures 1,451 psi to 5,000 psi (9,998 kPa to 34,474 kPa)
Working Pressure	Maximum 75% of full scale value
Ambient Temperature	Dry: -40°F to 250°F (-40°C to 120°C)
Process Temperature	Silicone Filled: -49°F to 302°F (-45°C to 150°C)
Accuracy	±1% ANSI/ASME Grade A
Enclosure Rating	IP65

Specifications - Seal	
Housing	AISI 316 SS
Diaphragm	AISI 316L SS, welded
Minimum Operating Pressure	15 psi (103 kPa)
Maximum Operating Pressure	2,500 psi to 5,000 psi (17,237 kPa to 34,474 kPa)
Process Connection	1/2" NPTM
System Fill	Silicone oil KF96 50CS

Order Codes

Connection	1/2” Bottom
Socket, Tube	**SS**
0/15 psi	PTR5061R1
0/30 psi	PTR5062R1
0/60 psi	PTR5063R1
0/100 psi	PTR5064R1
0/160 psi	PTR5065R1
0/200 psi	PTR5066R1
0/300 psi	PTR5067R1
0/400 psi	PTR5068R1
0/600 psi	PTR5069R1
0/1,000 psi	PTR5070R1
0/1,500 psi	PTR5071R1
0/2,000 psi	PTR5072R1
0/3,000 psi	PTR5073R1
0/5,000 psi	PTR5074R1

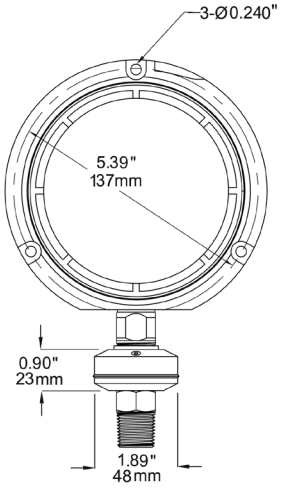

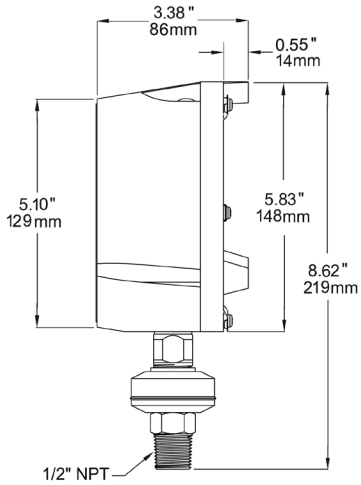

Other ranges and connection sizes (3/4” NPTM, 1” NPTM, 1/2” NPTF) available upon request. Other fills available. Pin stop at 6 o’clock position available. **For options, attach suffix to end of order code: i.e. PTR5070-SF45 for SILICONE-FILLED GAUGE CASE.**

Option suffix:

G = Glycerin-filled gauge case
RS = Orifice restrictor for severe pulsation
SF45 = Silicone-filled gauge case
SG-45 = Safety glass
TAG = Stainless steel tagging
TC = NIST test certificate of calibration
ZR = StabiliZR™ movement

PEM-ZR Economy StabiliZR™ Gauge

STABILIZR® power

Description & Features:

- StabiliZR™ dampened movement minimizes effects of pulsation and vibration
- Most economical, all-purpose pressure gauge
- 1.5” (40mm) to 4” (100mm) sizes
- Friction bezel rings
- Black steel case
- Brass wetted parts
- ±3-2-3% accuracy
- ASME B40.100 compliant (EN837-1 available)
- CRN registered
- 5 year warranty

Applications:

- General purpose gauge for plumbing, heating, air conditioning, pneumatic, hydraulic, water tanks and air compressors
- Suitable for non-clogging and non-corroding media

Specifications	
Dial	1.5” (40mm), 2” (50mm), 2.5” (63mm), 4” (100mm) white aluminum with black and red markings
Case	Steel, painted black (plastic available)
Lens	1.5” (40mm), 2” (50mm), 2.5” (63mm): Acrylic 4” (100mm): Glass
Ring	1.5” (40mm), 2” (50mm): Steel, painted black 2.5” (63mm), 4” (100mm): Steel, chrome plated
Socket	Brass
Connection	1/8” NPT or 1/4” NPT standard
Bourdon Tube	Phosphor bronze
Movement	Brass, StabiliZR™ dampened movement (silicone in sealed chamber)
Pointer	Aluminum, black
Welding	Silver alloy
Over-pressure Limit	25% of full scale value
Working Pressure	Maximum 75% of full scale value
Ambient/Process Temperature	-40°F to 150°F (-40°C to 65°C)
Accuracy	±3-2-3% ANSI/ASME Grade B
Enclosure Rating	IP52
Warning	⚠ **WARNING:** This product can expose you to chemicals including lead, which is known to the State of California to cause cancer and birth defects or other reproductive harm. For more information go to www.P65Warnings.ca.gov.

Order Codes (products in bold are normally stock in North America)

Dial Size	1.5” (40mm)		2” (50mm)				2.5” (63mm)		4” (100mm)
Connection	1/8” Bottom	1/8” Back (CB)	1/8” Bottom	1/8” Back (CB)	1/4” Bottom	1/4” Back (CB)	1/4” Bottom	1/4” Back (CB)	1/4” Bottom
Case Material	Steel						Steel		
30” Hg Vac/kPa	PEM1297ZR	PEM1397ZR	PEM195ZR	PEM1424ZR	**PEM135ZR**	**PEM1428ZR**	**PEM210ZR**	**PEM1431ZR**	PEM220ZR
30”/0/15 psi/kPa	-	-	-	-	-	-	PEM152ZR	-	-
30”/0/30 psi/kPa	-	-	-	-	-	-	PEM153ZR	-	-
30”/0/60 psi/kPa	-	-	-	-	-	-	PEM154ZR	-	-
30”/0/100 psi/kPa	-	-	-	-	-	-	PEM155ZR	-	-
0/15 psi/kPa	PEM1299ZR	PEM1399ZR	PEM196ZR	PEM1425ZR	**PEM136ZR**	**PEM1429ZR**	**PEM211ZR**	**PEM1436ZR**	PEM295ZR
0/30 psi/kPa	PEM1300ZR	PEM1400ZR	PEM206ZR	PEM1402ZR	**PEM199ZR**	**PEM1403ZR**	**PEM212ZR**	**PEM1437ZR**	PEM221ZR
0/60 psi/kPa	PEM1301ZR	PEM1401ZR	PEM207ZR	PEM1404ZR	**PEM201ZR**	**PEM1405ZR**	**PEM213ZR**	**PEM1438ZR**	PEM222ZR
0/100 psi/kPa	PEM1320ZR	PEM1420ZR	PEM208ZR	PEM1406ZR	**PEM202ZR**	**PEM1407ZR**	**PEM214ZR**	**PEM1439ZR**	PEM223ZR
0/160 psi/kPa	PEM1321ZR	PEM1421ZR	PEM197ZR	PEM1408ZR	**PEM203ZR**	**PEM1409ZR**	**PEM215ZR**	**PEM1440ZR**	PEM224ZR
0/200 psi/kPa	PEM1322ZR	PEM1422ZR	PEM209ZR	PEM1426ZR	**PEM204ZR**	**PEM1410ZR**	**PEM216ZR**	**PEM1441ZR**	PEM225ZR
0/300 psi/kPa	PEM1323ZR	PEM1423ZR	PEM198ZR	PEM1427ZR	PEM205ZR	PEM1411ZR	**PEM217ZR**	PEM1442ZR	PEM226ZR
0/400 psi/kPa	-	-	-	-	-	PEM1414ZR	PEM219ZR	PEM3412ZR	PEM227ZR
0/600 psi/kPa	-	-	-	-	-	PEM1412ZR	PEM218ZR	PEM3413ZR	-
0/1,000 psi/kPa	-	-	-	-	-	-	PEM290ZR	-	-
0/3,000 psi/kPa	-	-	-	-	-	-	PEM291ZR	-	-
0/5,000 psi/kPa	-	-	-	-	-	-	PEM292ZR	-	-

Other ranges and connection sizes available upon request. For scale change, refer to How to Order Guide for scale codes.
For options, attach suffix to end of order code: i.e. PEM1399ZR-GL15 for 1.5” GLASS LENS.

Option suffix:
EN = EN837-1 compliant
GL15 = Glass lens for 1.5” (40mm) dial
GL2 = Glass lens for 2” (50mm) dial
GL25 = Glass lens for 2.5” (63mm) dial

1.5” Bottom Connection

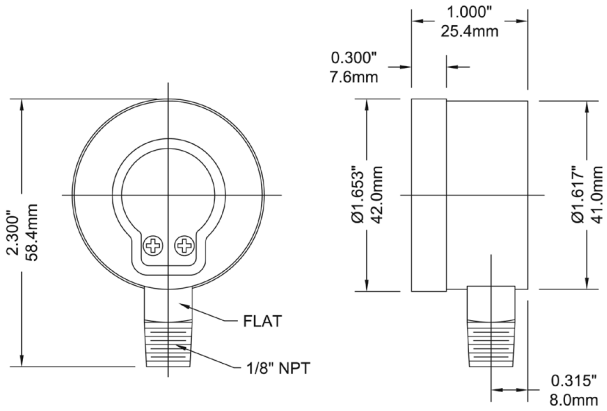

1.5” Back Connection

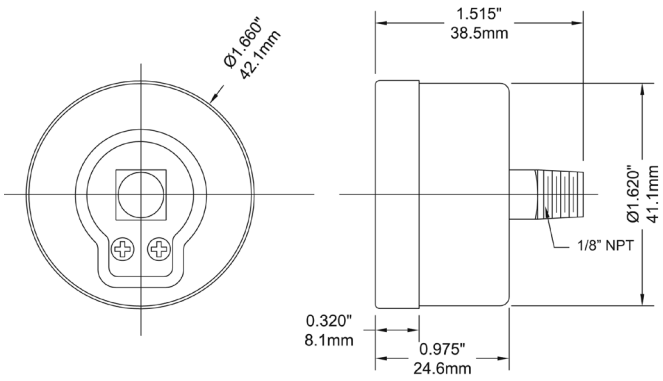

2” Bottom Connection

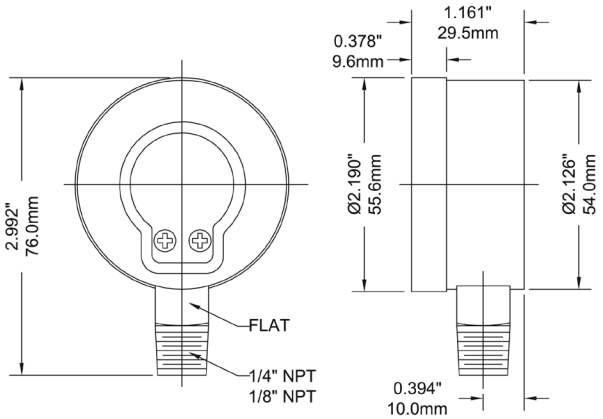

2” Back Connection

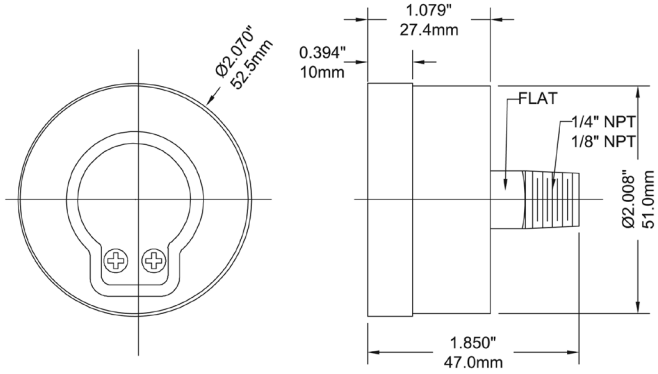

2.5” Bottom Connection

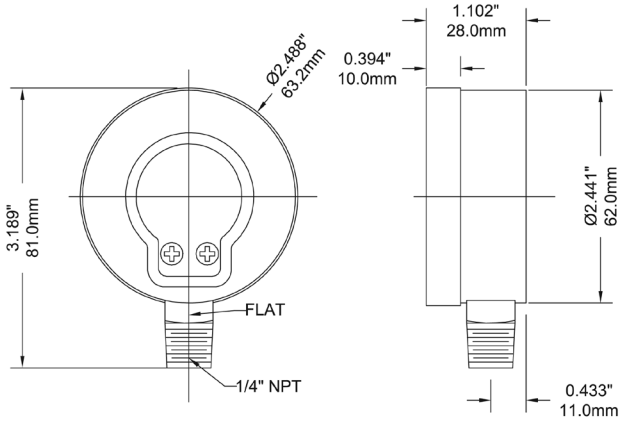

2.5” Back Connection

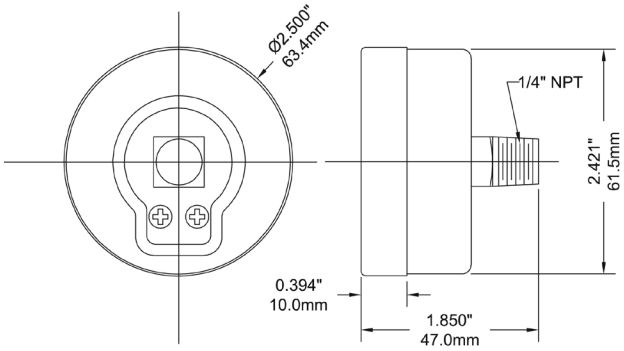

4” Bottom Connection

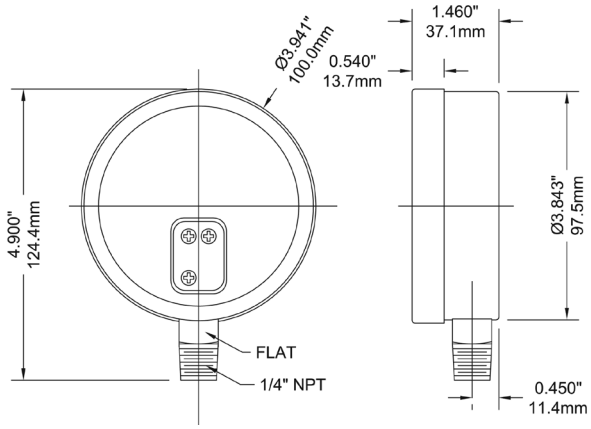

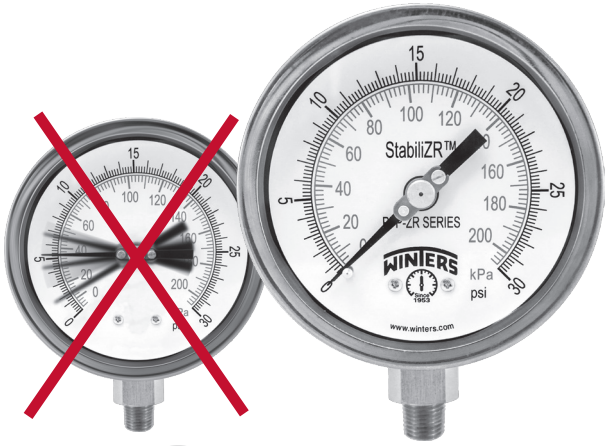

RoHS compliant

STABILIZR® power

Description & Features:

- StabiliZR™ dampened movement minimizes effects of pulsation and vibration as effectively as liquid filled gauges
- Restrictor screw standard on dual scale (optional on single scale)
- Stainless steel case
- Under and overload stops (4” and 6”)
- Back, bottom or panel mounted
- 316L SS wetted parts
- ASME B40.100 compliant (EN837-1 available)
- CRN registered
- 5 year warranty

Applications:

- Outdoor and severe ambient and process conditions
- Use where harmful vibration and pulsation are present
- Hydraulic equipment, oil field equipment, pumps, compressors and process industries

Specifications	
Dial	2.5” (63mm), 4” (100mm), 6” (150mm) white aluminum with black and red markings
Case	AISI 304 SS (dry)
Lens	Polycarbonate
Ring	AISI 304 SS bayonet
Socket	316L SS
Connection	2.5” (63mm): 1/4” NPT 4” (100mm), 6” (150mm): 1/4”, 1/2” NPT
Bourdon Tube	316L SS
Movement	304 SS, (under and overload stops 4” and 6”) and StabiliZR™ dampened movement (silicone in sealed chamber)
Pointer	2.5” (63mm): Aluminum, anodized black 4” (100mm), 6” (150mm): Aluminum, anodized black, micrometer adjustable
Welding	Laser welded socket to case
Over-pressure Limit	25% for pressures up to 1,450 psi (9,998 kPa), 15% for pressures over 1,450 psi (9,998 kPa)
Lens Ring Gasket	Buna N
Ambient Temperature	-40°F to 250°F (-40°C to 120°C)
Process Temperature	-40°F to 250°F (-40°C to 120°C)
Working Pressure	Maximum 75% of full scale value
Accuracy	2.5” (63mm): ±1.5% of full scale value 4” (100mm), 6” (150mm): ±1% ANSI/ASME Grade 1A
Enclosure Rating	NEMA 4X/IP66, EN60529-1 (IEC529-1)

Single Scale Order Codes (products in bold are normally stock in North America)

Dial Size	2.5" (63mm)		4" (100mm)				6" (150mm)	
Connection	1/4" Bottom	1/4" Back (CB)	1/4" Bottom	1/4" Back (LB)	1/2" Bottom	1/2" Back (LB)	1/4" Bottom	1/2" Bottom
30" Hg Vac	PFP820ZRR1	PFP840ZRR1	**PFP640ZRR1**	PFP1090ZRR1	PFP655ZRR1	-	PFP1078ZRR1	PFP2326ZRR1
30"/0/15 psi	PFP860ZRR1	PFP870ZRR1	PFP1036ZRR1	PFP1244ZRR1	PFP1044ZRR1	-	PFP1079ZRR1	PFP2327ZRR1
30"/0/30 psi	PFP861ZRR1	PFP871ZRR1	PFP1037ZRR1	PFP1245ZRR1	PFP1045ZRR1	-	PFP1052ZRR1	PFP2328ZRR1
30"/0/60 psi	PFP862ZRR1	PFP872ZRR1	PFP1038ZRR1	PFP1246ZRR1	PFP1046ZRR1	-	PFP1053ZRR1	PFP2329ZRR1
30"/0/100 psi	PFP863ZRR1	PFP873ZRR1	PFP1039ZRR1	PFP1247ZRR1	PFP1047ZRR1	-	PFP1054ZRR1	PFP2330ZRR1
30"/0/150 psi	PFP864ZRR1	PFP874ZRR1	PFP1040ZRR1	PFP1248ZRR1	PFP1048ZRR1	-	PFP1055ZRR1	PFP2331ZRR1
30"/0/200 psi	PFP866ZRR1	PFP876ZRR1	PFP1042ZRR1	PFP1249ZRR1	PFP1050ZRR1	-	PFP1057ZRR1	PFP2332ZRR1
30"/0/300 psi	PFP867ZRR1	PFP877ZRR1	PFP1043ZRR1	PFP1250ZRR1	PFP1051ZRR1	-	PFP1058ZRR1	PFP2333ZRR1
0/15 psi	PFP821ZRR1	PFP921ZRR1	PFP641ZRR1	PFP1091ZRR1	PFP656ZRR1	-	PFP1059ZRR1	PFP2334ZRR1
0/30 psi	PFP822ZRR1	PFP922ZRR1	PFP642ZRR1	PFP1092ZRR1	PFP657ZRR1	-	PFP1060ZRR1	PFP2335ZRR1
0/60 psi	**PFP823ZRR1**	PFP923ZRR1	PFP643ZRR1	PFP1093ZRR1	PFP658ZRR1	-	PFP1061ZRR1	PFP2336ZRR1
0/100 psi	**PFP824ZRR1**	PFP924ZRR1	PFP644ZRR1	PFP1094ZRR1	PFP659ZRR1	-	PFP1062ZRR1	PFP2337ZRR1
0/160 psi	PFP825ZRR1	PFP925ZRR1	PFP645ZRR1	PFP1095ZRR1	PFP660ZRR1	-	PFP1063ZRR1	PFP2338ZRR1
0/200 psi	PFP826ZRR1	PFP926ZRR1	PFP646ZRR1	PFP1096ZRR1	PFP661ZRR1	-	PFP1064ZRR1	PFP2339ZRR1
0/300 psi	PFP827ZRR1	PFP927ZRR1	PFP647ZRR1	PFP1097ZRR1	PFP662ZRR1	-	PFP1065ZRR1	PFP2340ZRR1
0/400 psi	PFP880ZRR1	PFP881ZRR1	PFP650ZRR1	PFP1251ZRR1	PFP666ZRR1	-	PFP1077ZRR1	PFP2341ZRR1
0/600 psi	PFP828ZRR1	PFP928ZRR1	PFP648ZRR1	PFP1098ZRR1	PFP663ZRR1	-	PFP1066ZRR1	PFP2342ZRR1
0/1,000 psi	PFP829ZRR1	PFP929ZRR1	PFP649ZRR1	PFP1099ZRR1	PFP664ZRR1	-	PFP1067ZRR1	PFP1080ZRR1
0/1,500 psi	PFP834ZRR1	PFP934ZRR1	-	PFP1252ZRR1	PFP665ZRR1	PFP1190ZRR1	PFP1068ZRR1	PFP1081ZRR1
0/2,000 psi	PFP830ZRR1	PFP930ZRR1	-	PFP1253ZRR1	PFP667ZRR1	PFP1191ZRR1	PFP1069ZRR1	PFP1082ZRR1
0/3,000 psi	PFP831ZRR1	PFP931ZRR1	-	PFP1254ZRR1	PFP668ZRR1	PFP1192ZRR1	PFP1070ZRR1	PFP1083ZRR1
0/5,000 psi	PFP832ZRR1	PFP852ZRR1	-	PFP1255ZRR1	PFP669ZRR1	PFP1193ZRR1	PFP1072ZRR1	PFP1085ZRR1
0/6,000 psi	PFP836ZRR1	PFP851ZRR1	-	PFP1259ZRR1	PFP675ZRR1	PFP1197ZRR1	-	PFP1089ZRR1
0/10,000 psi	PFP833ZRR1	PFP853ZRR1	-	PFP1256ZRR1	PFP670ZRR1	PFP1194ZRR1	**PFP1073ZRR1**	PFP1086ZRR1
0/15,000 psi	PFP835ZRR1	PFP855ZRR1	-	PFP1257ZRR1	PFP671ZRR1	PFP1195ZRR1	PFP1074ZRR1	PFP1087ZRR1
0/20,000 psi	PFP837ZRR1	-	-	PFP1258ZRR1	PFP672ZRR1	PFP1196ZRR1	PFP1075ZRR1	PFP1088ZRR1

Note: Restrictor screws are not standard on single scale gauges

Other ranges and connection sizes available upon request. For scale change, refer to How to Order Guide for scale codes. **For options, attach suffix to end of order code: i.e. PFP660ZRR1-4FF for FRONT FLANGE.**

Option suffix:

25BF = 2.5" (63mm) Back flange
25BOOT = 2.5" (63mm) Black rubber boot
25FF = 2.5" (63mm) Front flange
25SS = 2.5" (63mm) 316 SS case
25UC = 2.5" (63mm) U-Clamp
4BF = 4" (100mm) Back flange
4FF = 4" (100mm) Front flange
4SS = 4" (100mm) SS case
4UC-P = 4" (100mm) U-Clamp premium
6BF = 6" (150mm) Back flange
6SS = 6" (150mm) SS case
EN = EN837-1 compliant
MAXI25 = 2.5" (63mm) Maximum adjustable pointer
MAXI4 = 4" (100mm) Maximum adjustable pointer
RSP4 = 4" (100mm) Red set pointer
RSP6 = 6" (150mm) Red set pointer
SG25 = 2.5" (63mm) Safety glass lens
SG-4 = 4" (100mm) Safety glass lens
SG-6 = 6" (150mm) Safety glass lens

For Win**BRIGHT** dial options refer to Custom Dials

Dual Scale Order Codes (products in bold are normally stock in North America)

Dial Size	2.5" (63mm)		4" (100mm)				6" (150mm)	
Connection	1/4" Bottom	1/4" Back (CB)	1/4" Bottom	1/4" Back (LB)	1/2" Bottom	1/2" Back (LB)	1/4" Bottom	1/2" Bottom
30" Hg Vac/kPa	**PFP820ZR**	**PFP840ZR**	PFP640ZR	PFP1090ZR	PFP655ZR	PFP2308ZR	PFP1078ZR	PFP2326ZR
30"/0/15 psi/kPa	PFP860ZR	PFP870ZR	PFP1036ZR	PFP1244ZR	PFP1044ZR	PFP2309ZR	PFP1079ZR	PFP2327ZR
30"/0/30 psi/kPa	PFP861ZR	PFP871ZR	PFP1037ZR	PFP1245ZR	PFP1045ZR	PFP2310ZR	PFP1052ZR	PFP2328ZR
30"/0/60 psi/kPa	PFP862ZR	PFP872ZR	PFP1038ZR	PFP1246ZR	PFP1046ZR	PFP2311ZR	PFP1053ZR	PFP2329ZR
30"/0/100 psi/kPa	PFP863ZR	PFP873ZR	PFP1039ZR	PFP1247ZR	PFP1047ZR	PFP2312ZR	PFP1054ZR	PFP2330ZR
30"/0/150 psi/kPa	PFP864ZR	PFP874ZR	PFP1040ZR	PFP1248ZR	PFP1048ZR	PFP2313ZR	PFP1055ZR	PFP2331ZR
30"/0/200 psi/kPa	PFP866ZR	PFP876ZR	PFP1042ZR	PFP1249ZR	PFP1050ZR	PFP2314ZR	PFP1057ZR	PFP2332ZR
30"/0/300 psi/kPa	PFP867ZR	PFP877ZR	PFP1043ZR	PFP1250ZR	PFP1051ZR	PFP2315ZR	PFP1058ZR	PFP2333ZR
0/15 psi/kPa	**PFP821ZR**	**PFP921ZR**	PFP641ZR	PFP1091ZR	PFP656ZR	PFP2316ZR	PFP1059ZR	PFP2334ZR
0/30 psi/kPa	**PFP822ZR**	**PFP922ZR**	PFP642ZR	PFP1092ZR	PFP657ZR	PFP2317ZR	PFP1060ZR	PFP2335ZR
0/60 psi/kPa	**PFP823ZR**	**PFP923ZR**	**PFP643ZR**	PFP1093ZR	PFP658ZR	PFP2318ZR	PFP1061ZR	PFP2336ZR
0/100 psi/kPa	**PFP824ZR**	**PFP924ZR**	**PFP644ZR**	PFP1094ZR	PFP659ZR	PFP2319ZR	PFP1062ZR	PFP2337ZR
0/160 psi/kPa	**PFP825ZR**	**PFP925ZR**	**PFP645ZR**	PFP1095ZR	PFP660ZR	PFP2320ZR	PFP1063ZR	PFP2338ZR
0/200 psi/kPa	**PFP826ZR**	**PFP926ZR**	**PFP646ZR**	PFP1096ZR	PFP661ZR	PFP2321ZR	PFP1064ZR	PFP2339ZR
0/300 psi/kPa	**PFP827ZR**	**PFP927ZR**	**PFP647ZR**	PFP1097ZR	PFP662ZR	PFP2322ZR	PFP1065ZR	PFP2340ZR
0/400 psi/kPa	PFP880ZR	PFP881ZR	PFP650ZR	PFP1251ZR	PFP666ZR	PFP2323ZR	PFP1077ZR	PFP2341ZR
0/600 psi/kPa	PFP828ZR	PFP928ZR	**PFP648ZR**	PFP1098ZR	PFP663ZR	PFP2324ZR	PFP1066ZR	PFP2342ZR
0/1,000 psi/kPa	**PFP829ZR**	**PFP929ZR**	PFP649ZR	PFP1099ZR	PFP664ZR	PFP2325ZR	PFP1067ZR	PFP1080ZR
0/1,500 psi/kPa	PFP834ZR	PFP934ZR	PFP2301ZR	PFP1252ZR	PFP665ZR	PFP1190ZR	PFP1068ZR	PFP1081ZR
0/2,000 psi/kPa	**PFP830ZR**	PFP930ZR	PFP2302ZR	PFP1253ZR	PFP667ZR	PFP1191ZR	PFP1069ZR	PFP1082ZR
0/3,000 psi/kPa	PFP831ZR	PFP931ZR	PFP2303ZR	PFP1254ZR	PFP668ZR	PFP1192ZR	PFP1070ZR	PFP1083ZR
0/5,000 psi/kPa	PFP832ZR	PFP852ZR	PFP2304ZR	PFP1255ZR	PFP669ZR	PFP1193ZR	PFP1072ZR	PFP1085ZR
0/6,000 psi/kPa	PFP836ZR	PFP851ZR	PFP2305ZR	PFP1259ZR	PFP675ZR	PFP1197ZR	-	PFP1089ZR
0/10,000 psi/kPa	PFP833ZR	PFP853ZR	PFP2306ZR	PFP1256ZR	PFP670ZR	PFP1194ZR	PFP1073ZR	PFP1086ZR
0/15,000 psi/kPa	PFP835ZR	**PFP855ZR**	PFP2307ZR	PFP1257ZR	PFP671ZR	PFP1195ZR	PFP1074ZR	PFP1087ZR
0/20,000 psi/kPa	PFP837ZR	-	-	PFP1258ZR	PFP672ZR	PFP1196ZR	PFP1075ZR	PFP1088ZR

Other ranges and connection sizes available upon request. For scale change, refer to How to Order Guide for scale codes. **For options, attach suffix to end of order code: i.e. PFP660ZR-4FF for FRONT FLANGE.**

Option suffix:

25BF = 2.5" (63mm) Back flange
25BOOT = 2.5" (63mm) Black rubber boot
25FF = 2.5" (63mm) Front flange
25SS = 2.5" (63mm) 316 SS case
25UC = 2.5" (63mm) U-Clamp
4BF = 4" (100mm) Back flange
4FF = 4" (100mm) Front flange
4SS = 4" (100mm) SS case
4UC-P = 4" (100mm) U-Clamp premium
6BF = 6" (150mm) Back flange
6SS = 6" (150mm) SS case
EN = EN837-1 compliant
MAXI25 = 2.5" (63mm) Maximum adjustable pointer
MAXI4 = 4" (100mm) Maximum adjustable pointer
RSP4 = 4" (100mm) Red set pointer
RSP6 = 6" (150mm) Red set pointer
SG25 = 2.5" (63mm) Safety glass lens
SG-4 = 4" (100mm) Safety glass lens
SG-6 = 6" (150mm) Safety glass lens

For Win**BRIGHT** dial options refer to Custom Dials

2.5” Bottom Connection with Back Flange

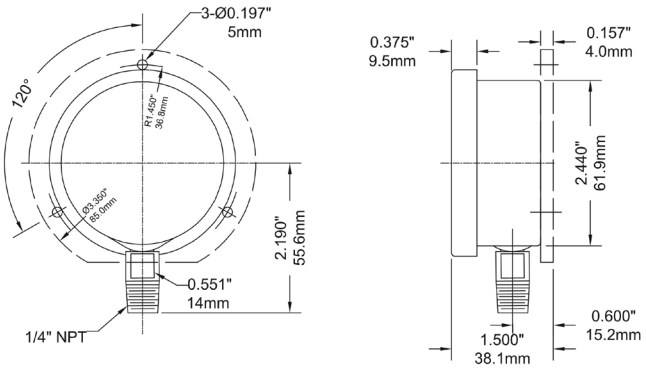

2.5” Back Connection with Front Flange

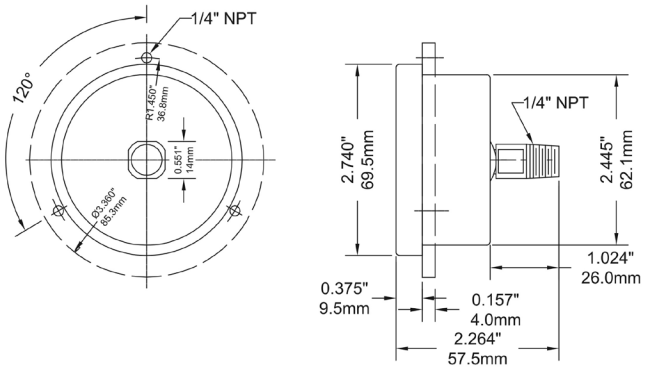

2.5” Back Connection with U-Clamp

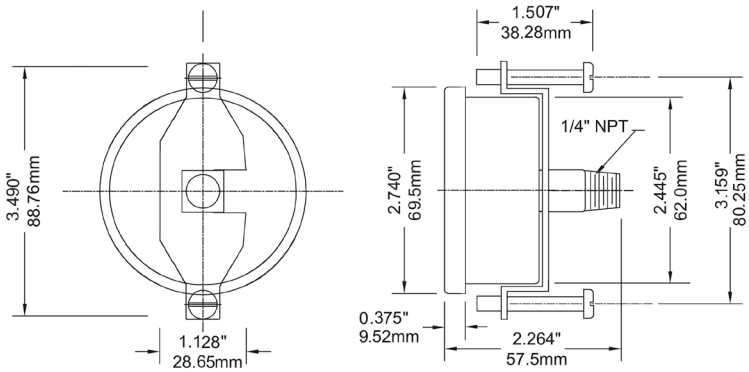

4” Bottom Connection with Back Flange

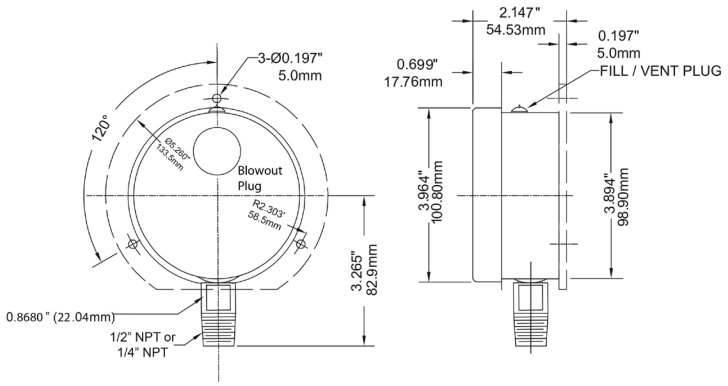

4” Lower Back Connection with Front Flange

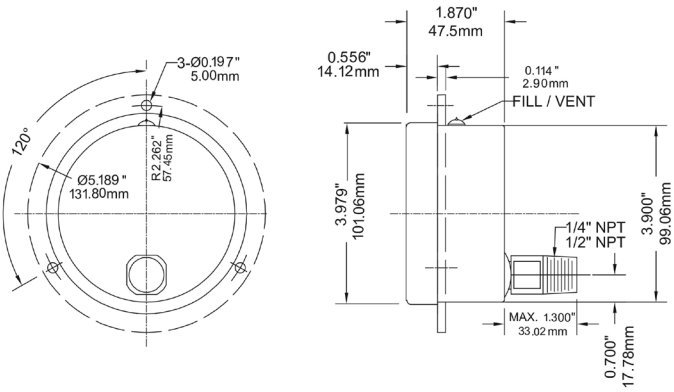

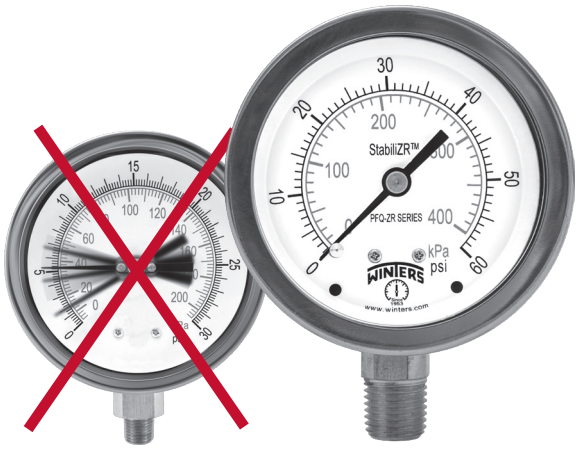

STABILIZR® power

Description & Features:

- StabiliZR™ dampened movement minimizes effects of pulsation and vibration as effectively as liquid filled gauges
- Restricted orifice standard on dual scale
- Crimp-on bezel
- Brass internals
- Dual scale (psi/kPa)
- U-Clamps and front flanges for panel mounting
- ASME B40.100 compliant (EN837-1 available)
- CRN registered
- 5 year warranty

Applications:

- Ideal for pumps, compressors, hydraulic presses, machinery, pneumatic equipment and motors in harsh environments
- Use where harmful vibration and pulsation are present

Specifications	
Dial	2.5” (63mm) aluminum with red and black markings
Case	304 SS (dry)
Lens	Polycarbonate
Ring	304 SS (crimped on)
Socket	Brass with restricted orifice (dual scale only)
Connection	1/4” NPT
Bourdon Tube	Bronze
Movement	Brass with StabiliZR™ dampened movement (silicone in sealed chamber)
Pointer	Anodized black aluminum
Over-pressure Limit	25% for pressures up to 1,450 psi (9,998 kPa), 15% for pressures over 1,450 psi (9,998 kPa)
Socket Gasket	Buna N for two-piece internal socket seal
Fill Plug	Buna N
Lens Ring Gasket	Silicone rubber
Working Pressure	75% of full scale value
Ambient/Process Temperature	-40°F to 200°F (-40°C to 93°C)
Accuracy	±1.5% of full scale value
Enclosure Rating	IP65
Warning	⚠ **WARNING:** This product can expose you to chemicals including lead, which is known to the State of California to cause cancer and birth defects or other reproductive harm. For more information go to www.P65Warnings.ca.gov.

Single Scale Order Codes

Dial Size	2.5" (63mm)	
Connection	1/4" Bottom	1/4" Back (CB)
30" Hg Vac	PFQ801ZRR1	PFQ900ZRR1
30"/0/15 psi	PFQ790ZRR1	PFQ890ZRR1
30"/0/30 psi	PFQ798ZRR1	PFQ898ZRR1
30"/0/60 psi	PFQ799ZRR1	PFQ899ZRR1
30"/0/100 psi	PFQ791ZRR1	PFQ891ZRR1
30"/0/160 psi	PFQ792ZRR1	PFQ892ZRR1
30"/0/200 psi	PFQ794ZRR1	PFQ894ZRR1
30"/0/300 psi	PFQ795ZRR1	PFQ895ZRR1
0/15 psi	PFQ800ZRR1	PFQ901ZRR1
0/30 psi	PFQ802ZRR1	PFQ902ZRR1
0/60 psi	PFQ803ZRR1	PFQ903ZRR1
0/100 psi	PFQ804ZRR1	PFQ904ZRR1
0/160 psi	PFQ805ZRR1	PFQ905ZRR1
0/200 psi	PFQ806ZRR1	PFQ906ZRR1
0/300 psi	PFQ807ZRR1	PFQ907ZRR1
0/400 psi	PFQ817ZRR1	PFQ917ZRR1
0/600 psi	PFQ808ZRR1	PFQ908ZRR1
0/1,000 psi	PFQ809ZRR1	PFQ909ZRR1
0/1,500 psi	PFQ816ZRR1	PFQ914ZRR1
0/2,000 psi	PFQ810ZRR1	PFQ910ZRR1
0/3,000 psi	PFQ811ZRR1	PFQ911ZRR1
0/5,000 psi	PFQ812ZRR1	PFQ912ZRR1
0/6,000 psi	PFQ814ZRR1	PFQ915ZRR1
0/7,500 psi	PFQ818ZRR1	PFQ918ZRR1
0/10,000 psi	PFQ813ZRR1	PFQ913ZRR1

Dual Scale Order Codes (products in bold are normally stock in North America)

Dial Size	2.5" (63mm)	
Connection	1/4" Bottom	1/4" Back (CB)
30" Hg Vac/kPa	**PFQ801ZR**	PFQ900ZR
30"/0/15 psi/kPa	PFQ790ZR	PFQ890ZR
30"/0/30 psi/kPa	PFQ798ZR	PFQ898ZR
30"/0/60 psi/kPa	PFQ799ZR	PFQ899ZR
30"/0/100 psi/kPa	PFQ791ZR	PFQ891ZR
30"/0/150 psi/kPa	PFQ792ZR	PFQ892ZR
30"/0/200 psi/kPa	PFQ794ZR	PFQ894ZR
30"/0/300 psi/kPa	PFQ795ZR	PFQ895ZR
0/15 psi/kPa	PFQ800ZR	**PFQ901ZR**
0/30 psi/kPa	PFQ802ZR	PFQ902ZR
0/60 psi/kPa	**PFQ803ZR**	**PFQ903ZR**
0/100 psi/kPa	**PFQ804ZR**	**PFQ904ZR**
0/160 psi/kPa	**PFQ805ZR**	**PFQ905ZR**
0/200 psi/kPa	**PFQ806ZR**	**PFQ906ZR**
0/300 psi/kPa	**PFQ807ZR**	**PFQ907ZR**
0/400 psi/kPa	PFQ817ZR	PFQ917ZR
0/600 psi/kPa	PFQ808ZR	PFQ908ZR
0/1,000 psi/kPa	**PFQ809ZR**	**PFQ909ZR**
0/1,500 psi/kPa	PFQ816ZR	PFQ914ZR
0/2,000 psi/kPa	**PFQ810ZR**	**PFQ910ZR**
0/3,000 psi/kPa	PFQ811ZR	PFQ911ZR
0/5,000 psi/kPa	**PFQ812ZR**	**PFQ912ZR**
0/6,000 psi/kPa	PFQ814ZR	PFQ915ZR
0/7,500 psi/kPa	PFQ818ZR	PFQ918ZR
0/10,000 psi/kPa	PFQ813ZR	PFQ913ZR

Note: Restrictor screws are not standard on single scale gauges

Other ranges and connection sizes available upon request. For scale change, refer to How to Order Guide for scale codes.
For options, attach suffix to end of order code: i.e. PFQ807ZR-25BF for BACK FLANGE.

Option suffix:

25BF = 2.5" (63mm) Back flange
25BOOT = 2.5" (63mm) Black rubber boot
25FF = 2.5" (63mm) Front flange
25UC = 2.5" (63mm) U-Clamp
EN = EN837-1 compliant
REST = Restrictor screw (single scale only)

2.5" Bottom Connection with Back Flange

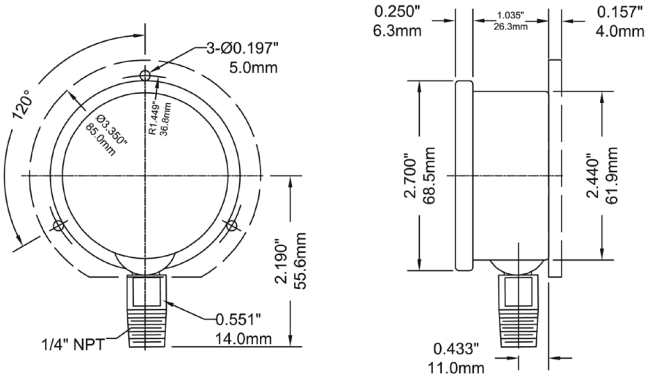

2.5" Back Connection with Front Flange

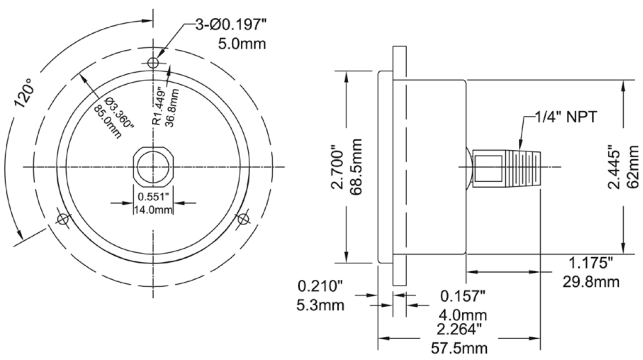

Single Scale Order Codes

Dial Size	4" (100mm)			
Connection	1/4" Bottom	1/4" Back (CB)	1/2" Bottom	1/2" Back (CB)
30" Hg Vac	PFQ700ZRR1	PFQ730ZRR1	PFQ1234ZRR1	PFQ1285ZRR1
30"/0/15 psi	PFQ701ZRR1	PFQ731ZRR1	PFQ1235ZRR1	PFQ1286ZRR1
30"/0/30 psi	PFQ702ZRR1	PFQ732ZRR1	PFQ1236ZRR1	PFQ1287ZRR1
30"/0/60 psi	PFQ703ZRR1	PFQ733ZRR1	PFQ1237ZRR1	PFQ1288ZRR1
30"/0/100 psi	PFQ704ZRR1	PFQ734ZRR1	PFQ1238ZRR1	PFQ1289ZRR1
30"/0/160 psi	PFQ705ZRR1	PFQ735ZRR1	PFQ1239ZRR1	PFQ1290ZRR1
30"/0/200 psi	PFQ706ZRR1	PFQ736ZRR1	PFQ1240ZRR1	PFQ1291ZRR1
30"/0/300 psi	PFQ707ZRR1	PFQ737ZRR1	PFQ1241ZRR1	PFQ1292ZRR1
0/15 psi	PFQ708ZRR1	PFQ738ZRR1	PFQ1242ZRR1	PFQ1293ZRR1
0/30 psi	PFQ709ZRR1	PFQ739ZRR1	PFQ1243ZRR1	PFQ1294ZRR1
0/60 psi	PFQ710ZRR1	PFQ740ZRR1	PFQ1244ZRR1	PFQ1295ZRR1
0/100 psi	PFQ711ZRR1	PFQ741ZRR1	PFQ1245ZRR1	PFQ1296ZRR1
0/160 psi	PFQ712ZRR1	PFQ742ZRR1	PFQ1246ZRR1	PFQ1298ZRR1
0/200 psi	PFQ713ZRR1	PFQ743ZRR1	PFQ1247ZRR1	PFQ1524ZRR1
0/300 psi	PFQ714ZRR1	PFQ744ZRR1	PFQ1248ZRR1	PFQ1525ZRR1
0/400 psi	PFQ715ZRR1	PFQ745ZRR1	PFQ1249ZRR1	PFQ1526ZRR1
0/600 psi	PFQ716ZRR1	PFQ746ZRR1	PFQ1250ZRR1	PFQ1527ZRR1
0/1,000 psi	PFQ724ZRR1	PFQ192ZRR1	PFQ717ZRR1	PFQ747ZRR1
0/1,500 psi	PFQ725ZRR1	PFQ241ZRR1	PFQ718ZRR1	PFQ748ZRR1
0/2,000 psi	PFQ726ZRR1	PFQ242ZRR1	PFQ719ZRR1	PFQ749ZRR1
0/3,000 psi	PFQ727ZRR1	PFQ243ZRR1	PFQ720ZRR1	PFQ750ZRR1
0/5,000 psi	PFQ728ZRR1	PFQ244ZRR1	PFQ721ZRR1	PFQ751ZRR1
0/6,000 psi	PFQ346ZRR1	PFQ246ZRR1	PFQ784ZRR1	PFQ785ZRR1
0/7,500 psi	PFQ347ZRR1	PFQ247ZRR1	PFQ786ZRR1	PFQ886ZRR1
0/10,000 psi	PFQ729ZRR1	PFQ360ZRR1	PFQ722ZRR1	PFQ752ZRR1
0/15,000 psi	PFQ261ZRR1	PFQ361ZRR1	PFQ723ZRR1	PFQ753ZRR1

Dual Scale Order Codes (products in bold are normally stock in North America)

Dial Size	4" (100mm)			
Connection	1/4" Bottom	1/4" Back (CB)	1/2" Bottom	1/2" Back (CB)
30" Hg Vac/kPa	PFQ700ZR	PFQ730ZR	PFQ1234ZR	PFQ1285ZR
30"/0/15 psi/kPa	PFQ701ZR	PFQ731ZR	PFQ1235ZR	PFQ1286ZR
30"/0/30 psi/kPa	PFQ702ZR	PFQ732ZR	PFQ1236ZR	PFQ1287ZR
30"/0/60 psi/kPa	PFQ703ZR	PFQ733ZR	PFQ1237ZR	PFQ1288ZR
30"/0/100 psi/kPa	PFQ704ZR	PFQ734ZR	PFQ1238ZR	PFQ1289ZR
30"/0/160 psi/kPa	PFQ705ZR	PFQ735ZR	PFQ1239ZR	PFQ1290ZR
30"/0/200 psi/kPa	PFQ706ZR	PFQ736ZR	PFQ1240ZR	PFQ1291ZR
30"/0/300 psi/kPa	PFQ707ZR	PFQ737ZR	PFQ1241ZR	PFQ1292ZR
0/15 psi/kPa	PFQ708ZR	PFQ738ZR	PFQ1242ZR	PFQ1293ZR
0/30 psi/kPa	PFQ709ZR	PFQ739ZR	PFQ1243ZR	PFQ1294ZR
0/60 psi/kPa	**PFQ710ZR**	PFQ740ZR	PFQ1244ZR	PFQ1295ZR
0/100 psi/kPa	**PFQ711ZR**	PFQ741ZR	PFQ1245ZR	PFQ1296ZR
0/160 psi/kPa	**PFQ712ZR**	PFQ742ZR	PFQ1246ZR	PFQ1298ZR
0/200 psi/kPa	**PFQ713ZR**	PFQ743ZR	PFQ1247ZR	PFQ1524ZR
0/300 psi/kPa	**PFQ714ZR**	PFQ744ZR	PFQ1248ZR	PFQ1525ZR
0/400 psi/kPa	PFQ715ZR	PFQ745ZR	PFQ1249ZR	PFQ1526ZR
0/600 psi/kPa	PFQ716ZR	PFQ746ZR	PFQ1250ZR	PFQ1527ZR
0/1,000 psi/kPa	PFQ724ZR	PFQ192ZR	PFQ717ZR	PFQ747ZR
0/1,500 psi/kPa	PFQ725ZR	PFQ241ZR	PFQ718ZR	PFQ748ZR
0/2,000 psi/kPa	PFQ726ZR	PFQ242ZR	PFQ719ZR	PFQ749ZR
0/3,000 psi/kPa	PFQ727ZR	PFQ243ZR	PFQ720ZR	PFQ750ZR
0/5,000 psi/kPa	PFQ728ZR	PFQ244ZR	PFQ721ZR	PFQ751ZR
0/6,000 psi/kPa	PFQ346ZR	PFQ246ZR	PFQ784ZR	PFQ785ZR
0/7,500 psi/kPa	PFQ347ZR	PFQ247ZR	PFQ786ZR	PFQ886ZR
0/10,000 psi/kPa	PFQ729ZR	PFQ360ZR	PFQ722ZR	PFQ752ZR
0/15,000 psi/kPa	PFQ261ZR	PFQ361ZR	PFQ723ZR	PFQ753ZR

Note: Restrictor screws are not standard on single scale gauges

Other ranges and connection sizes available upon request. For scale change, refer to How to Order Guide for scale codes.
For options, attach suffix to end of order code: i.e. PFQ709ZR-4BF for BACK FLANGE.

Option suffix:
4BF = 4" (100mm) Back flange
4FF = 4" (100mm) Front flange
4UC-Q = 4" (100mm) U-Clamp (for brass movement)
EN = EN837-1 compliant
REST = Restrictor screw (single scale only)

PN2-ZR NACE StabiliZR™ Gauge - MR0175-2002

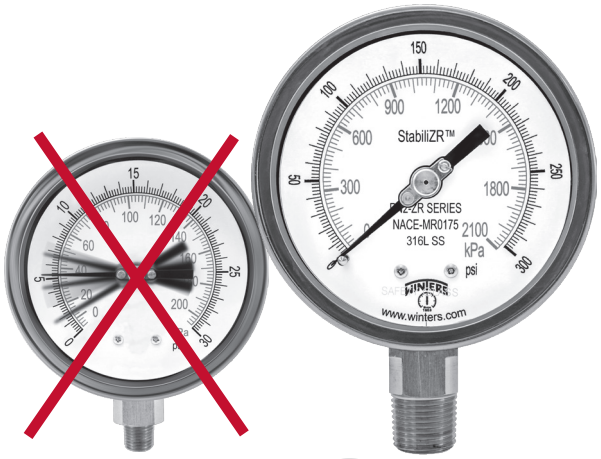

Description & Features:

- Designed for sour gas applications requiring NACE Standards MR0175-2002 (NACE Standards MR0103-2003 available)
- StabiliZR™ dampened movement minimizes effects of pulsation and vibration as effectively as liquid filled gauges
- Blow out back plug
- Under and overload stops
- Wetted parts meet hardness requirements
- ASME B40.100 compliant (EN837-1 available)
- CRN registered
- 5 year warranty

Applications:

- Sour gas applications requiring gauges that meet NACE International Standards

Specifications	
Dial	4” (100mm) aluminum with black and red markings
Case	304 SS (dry)
Lens	Laminated safety glass
Ring	304 SS, bayonet
Socket	316L SS
Connection	1/2” NPT bottom
Bourdon Tube	316L SS
Movement	304 SS with under and overload stops and StabiliZR™ dampened movement (silicone in sealed chamber)
Pointer	Aluminum, anodized black, micrometer adjustable
Over-Pressure Limit	25% for pressures up to 1,450 psi (9,998 kPa), 15% for pressures over 1,450 psi (9,998 kPa)
Ambient/Process Temperature	-40°F to 250°F (-40°C to 120°C)
Accuracy	±1% ANSI/ASME Grade 1A
Enclosure Rating	IP66

Order Codes

Dial Size	4” (100mm)
Connection	1/2” Bottom
30” Hg Vac/kPa	PN2655ZR
30”/0/15 psi/kPa	PN21044ZR
30”/0/30 psi/kPa	PN21045ZR
30”/0/60 psi/kPa	PN21046ZR
30”/0/100 psi/kPa	PN21047ZR
30”/0/150 psi/kPa	PN21048ZR
30”/0/200 psi/kPa	PN21050ZR
30”/0/300 psi/kPa	PN21051ZR
0/15 psi/kPa	PN2656ZR
0/30 psi/kPa	PN2657ZR
0/60 psi/kPa	PN2658ZR
0/100 psi/kPa	PN2659ZR
0/160 psi/kPa	PN2660ZR
0/200 psi/kPa	PN2661ZR
0/300 psi/kPa	PN2662ZR
0/400 psi/kPa	PN2666ZR
0/600 psi/kPa	PN2663ZR
0/1,000 psi/kPa	PN2664ZR
0/1,500 psi/kPa	PN2665ZR
0/2,000 psi/kPa	PN2667ZR
0/3,000 psi/kPa	PN2668ZR
0/5,000 psi/kPa	PN2669ZR
0/6,000 psi/kPa	PN2675ZR
0/10,000 psi/kPa	PN2670ZR
0/15,000 psi/kPa	PN2671ZR
0/20,000 psi/kPa	PN2672ZR

Other ranges and connection sizes available upon request. For scale change, refer to How to Order Guide for scale codes.
For options, attach suffix to end of order code: i.e. PN2664ZR-4BF for BACK FLANGE.

Option suffix:
4BF = 4” (100mm) Back flange
4NSS = 4” (100mm) SS case
4UC-P = 4” (100mm) U-Clamp premium
EN = EN837-1 compliant
REST = Restrictor screw

4” Bottom Connection

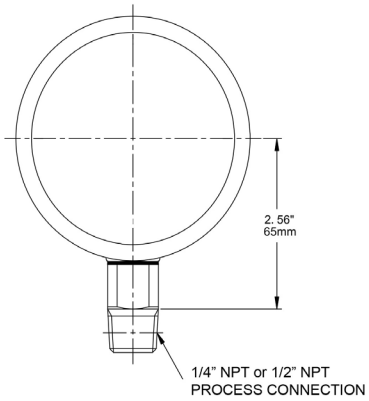

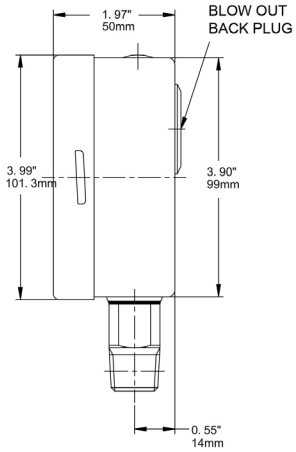

PPC-ZR StabiliZR™ Process Gauge

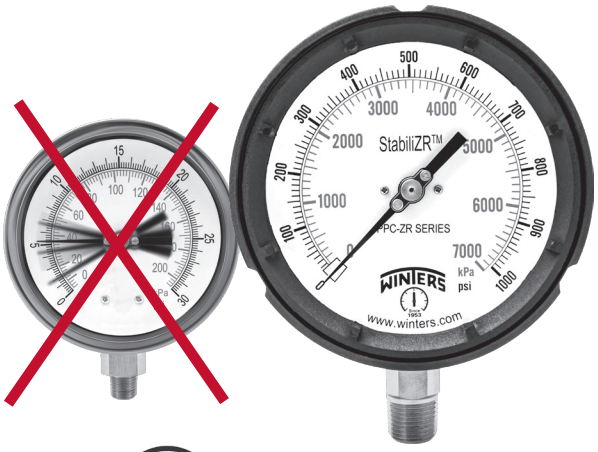

RoHS compliant

STABILIZR® power

Note; RoHS applies to SS and Monel® internals only

Description & Features:

- StabiliZR™ dampened movement minimizes effects of pulsation and vibration as effectively as liquid filled gauges
- Solid phenolic front and polypropylene pressure relief back safety case
- ±0.5% accuracy
- Stainless steel full rotary movement
- Micrometer adjustable pointer for ease in calibration
- Under and overload stops
- 316L stainless steel or brass wetted parts standard
- Restricted orifice standard on dual scale (optional on single scale)
- ASME B40.100 compliant
- CRN registered
- 5 year warranty

Applications:

- Ideally suited for process, chemical, petroleum and power industries
- Suitable for non-clogging corrosive media
- Used where operator safety is a requirement
- Processes where pulsation and vibration exist

Specifications	Stainless Steel Internals	Brass Internals
Dial	4.5” (115mm) aluminum with black and red markings	4.5” (115mm) white aluminum with black and red markings
Case	Black phenolic with pressure relief back, solid front, integral back flange	Black phenolic with pressure relief back, solid front, integral back flange
Solid Wall	Phenolic	Phenolic
Pressure Relief Back	Polypropylene	Polypropylene
Window	Polycarbonate	Polycarbonate
Ring	Phenolic	Phenolic
Pointer	Aluminum, anodized black, micrometer adjustable	Aluminum, anodized black, micrometer adjustable
Socket	316L SS	OT 58 brass
Connection	1/4” or 1/2” NPT standard, bottom or back	1/4” NPT or 1/2” NPT standard, bottom or back
Bourdon Tube	316L SS, drawn seamless	Phosphor bronze
Movement	304 SS with under and overload stops and StabiliZR™ dampened movement (silicone in sealed chamber)	304 SS with under and overload stops and StabiliZR™ dampened movement (silicone in sealed chamber)
Gasket Materials	Silicone (FKM option)	Silicone (FKM option)
Welding	TIG	Silver alloy
Over-pressure Limit	25% for pressures below 1,500 psi (10,341 kPa), 15% for pressures 1,500 to 8,700 psi (10,341 kPa to 59,984 kPa), 10% for pressures above 8,700 psi (59,984 kPa)	25% for pressures below 1,500 psi (10,341 kPa), 15% for pressures 1,500 to 8,700 psi (10,341 kPa to 59,984 kPa), 10% for pressures above 8,700 psi (59,984 kPa)
Working Pressure	Maximum 75% of full scale value	Maximum 75% of full scale value
Ambient Temperature	-40°F to 250°F (-40°C to 120°C)	-40°F to 250°F (-40°C to 120°C)
Process Temperature	-40°F to 250°F (-40°C to 120°C)	-40°F to 150°F (-40°C to 65°C)
Accuracy	±0.5% ANSI/ASME Grade 2A	±0.5% ANSI/ASME Grade 2A
Enclosure Rating	IP65	IP65
Warning (brass internals only)	N/A	⚠ **WARNING:** This product can expose you to chemicals including lead, which is known to the State of California to cause cancer and birth defects or other reproductive harm. For more information go to www.P65Warnings.ca.gov.

Single Scale Order Codes (products in bold are normally stock in North America)

Connection	1/4" Bottom	1/4" Back (LB)	1/4" Bottom	1/4" Back (LB)	1/2" Bottom	1/2" Back (LB)
Socket, Tube	Brass		SS			
30" Hg Vac	PPC5080ZRR1	PPC5280ZRR1	PPC5040ZRR1	PPC5340ZRR1	PPC5060ZRR1	PPC5460ZRR1
30"/0/15 psi	PPC5120ZRR1	PPC5220ZRR1	PPC5130ZRR1	PPC5330ZRR1	PPC5140ZRR1	PPC5440ZRR1
30"/0/30 psi	PPC5121ZRR1	PPC5221ZRR1	PPC5131ZRR1	PPC5331ZRR1	PPC5141ZRR1	PPC5441ZRR1
30"/0/60 psi	PPC5122ZRR1	PPC5222ZRR1	PPC5132ZRR1	PPC5332ZRR1	PPC5142ZRR1	PPC5442ZRR1
30"/0/100 psi	PPC5123ZRR1	PPC5223ZRR1	PPC5133ZRR1	PPC5333ZRR1	PPC5143ZRR1	PPC5443ZRR1
30"/0/160 psi	PPC5124ZRR1	PPC5224ZRR1	PPC5134ZRR1	PPC5334ZRR1	PPC5144ZRR1	PPC5444ZRR1
30"/0/200 psi	PPC5125ZRR1	PPC5225ZRR1	PPC5135ZRR1	PPC5335ZRR1	PPC5145ZRR1	PPC5445ZRR1
30"/0/300 psi	PPC5126ZRR1	PPC5226ZRR1	PPC5136ZRR1	PPC5336ZRR1	PPC5146ZRR1	PPC5446ZRR1
0/15 psi	PPC5081ZRR1	PPC5281ZRR1	PPC5041ZRR1	PPC5341ZRR1	PPC5061ZRR1	PPC5461ZRR1
0/30 psi	PPC5082ZRR1	PPC5282ZRR1	PPC5042ZRR1	PPC5342ZRR1	PPC5062ZRR1	PPC5462ZRR1
0/60 psi	PPC5083ZRR1	PPC5283ZRR1	PPC5043ZRR1	PPC5343ZRR1	PPC5063ZRR1	PPC5463ZRR1
0/100 psi	PPC5084ZRR1	PPC5284ZRR1	PPC5044ZRR1	PPC5344ZRR1	PPC5064ZRR1	PPC5464ZRR1
0/160 psi	PPC5085ZRR1	PPC5285ZRR1	PPC5045ZRR1	PPC5345ZRR1	PPC5065ZRR1	PPC5465ZRR1
0/200 psi	PPC5086ZRR1	PPC5286ZRR1	PPC5046ZRR1	PPC5346ZRR1	PPC5066ZRR1	PPC5466ZRR1
0/300 psi	PPC5087ZRR1	PPC5287ZRR1	PPC5047ZRR1	PPC5347ZRR1	**PPC5067ZRR1**	PPC5467ZRR1
0/400 psi	PPC5088ZRR1	PPC5288ZRR1	PPC5048ZRR1	PPC5348ZRR1	PPC5068ZRR1	PPC5468ZRR1
0/600 psi	PPC5089ZRR1	PPC5289ZRR1	PPC5049ZRR1	PPC5349ZRR1	PPC5069ZRR1	PPC5469ZRR1
0/800 psi	-	-	PPC5058ZRR1	PPC5358ZRR1	PPC5078ZRR1	PPC5478ZRR1
0/1,000 psi	PPC5098ZRR1	PPC5298ZRR1	PPC5050ZRR1	PPC5350ZRR1	PPC5070ZRR1	PPC5470ZRR1
Connection	**1/2" Bottom**	**1/2" Back (LB)**	**1/4" Bottom**	**1/4" Back (LB)**	**1/2" Bottom**	**1/2" Back (LB)**
0/1,000 psi	PPC5188ZRR1	PPC5290ZRR1	PPC5050ZRR1	PPC5350ZRR1	PPC5070ZRR1	PPC5470ZRR1
0/1,500 psi	PPC5091ZRR1	PPC5291ZRR1	PPC5051ZRR1	PPC5351ZRR1	PPC5071ZRR1	PPC5471ZRR1
0/2,000 psi	PPC5092ZRR1	PPC5292ZRR1	PPC5052ZRR1	PPC5352ZRR1	PPC5072ZRR1	PPC5472ZRR1
0/3,000 psi	PPC5093ZRR1	PPC5293ZRR1	PPC5053ZRR1	PPC5353ZRR1	PPC5073ZRR1	PPC5473ZRR1
0/5,000 psi	PPC5094ZRR1	PPC5294ZRR1	PPC5054ZRR1	PPC5354ZRR1	PPC5074ZRR1	PPC5474ZRR1
0/10,000 psi	PPC5095ZRR1	PPC5295ZRR1	PPC5055ZRR1	PPC5355ZRR1	PPC5075ZRR1	PPC5475ZRR1
0/15,000 psi	PPC5096ZRR1	PPC5296ZRR1	PPC5056ZRR1	PPC5356ZRR1	PPC5076ZRR1	PPC5476ZRR1
0/20,000 psi	PPC5097ZRR1	PPC5297ZRR1	PPC5057ZRR1	PPC5357ZRR1	PPC5077ZRR1	PPC5477ZRR1

Note: Restrictor screws are not standard on single scale gauges

Other ranges and connection sizes available upon request. For scale change, refer to How to Order Guide for scale codes. 1/2" NPT brass available on ranges below 1,000 psi.

For options, attach suffix to end of order code: i.e. PPC5284ZRR1-FMR for FLUSH MOUNTED RING.

Option suffix:

CS = Carbon steel socket/stainless steel tube
FMR = Flush mounted ring
HCSF = 4.5" (115mm) Solid front hinged case (back connection only)
MAXI45 = 4.5" (115mm) Maxi pointer
MS = Monel® tube and socket
SG-45 = 4.5" (115mm) Safety glass
REST = Restrictor screw

For Win**BRIGHT** dial options refer to Custom Dials

4.5" Bottom Connection

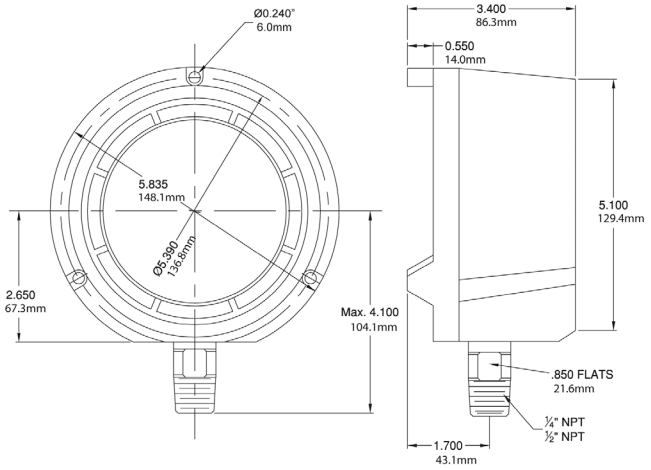

4.5" Back Connection

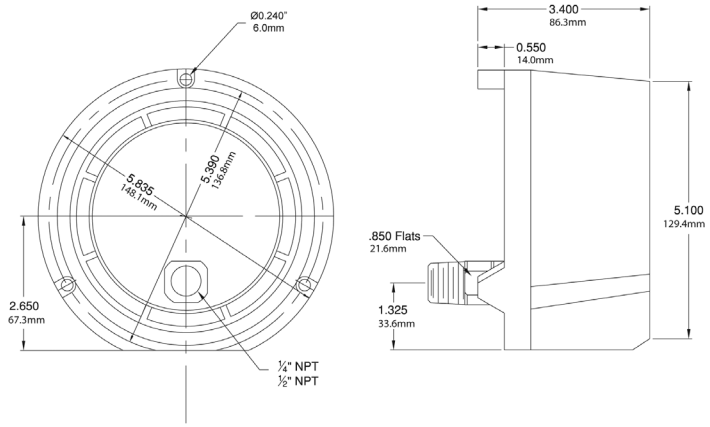

Dual Scale Order Codes (products in bold are normally stock in North America)

Connection	1/4" Bottom	1/4" Back (LB)	1/4" Bottom	1/4" Back (LB)	1/2" Bottom	1/2" Back (LB)
Socket, Tube	Brass		SS			
30" Hg Vac/kPa	PPC5080ZR	PPC5280ZR	PPC5040ZR	PPC5340ZR	PPC5060ZR	PPC5460ZR
30"/0/15 psi/kPa	PPC5120ZR	PPC5220ZR	PPC5130ZR	PPC5330ZR	PPC5140ZR	PPC5440ZR
30"/0/30 psi/kPa	PPC5121ZR	PPC5221ZR	PPC5131ZR	PPC5331ZR	PPC5141ZR	PPC5441ZR
30"/0/60 psi/kPa	PPC5122ZR	PPC5222ZR	PPC5132ZR	PPC5332ZR	PPC5142ZR	PPC5442ZR
30"/0/100 psi/kPa	PPC5123ZR	PPC5223ZR	PPC5133ZR	PPC5333ZR	PPC5143ZR	PPC5443ZR
30"/0/160 psi/kPa	PPC5124ZR	PPC5224ZR	PPC5134ZR	PPC5334ZR	PPC5144ZR	PPC5444ZR
30"/0/200 psi/kPa	PPC5125ZR	PPC5225ZR	PPC5135ZR	PPC5335ZR	PPC5145ZR	PPC5445ZR
30"/0/300 psi/kPa	PPC5126ZR	PPC5226ZR	PPC5136ZR	PPC5336ZR	PPC5146ZR	PPC5446ZR
0/15 psi/kPa	PPC5081ZR	PPC5281ZR	PPC5041ZR	PPC5341ZR	PPC5061ZR	PPC5461ZR
0/30 psi/kPa	PPC5082ZR	PPC5282ZR	PPC5042ZR	PPC5342ZR	PPC5062ZR	PPC5462ZR
0/60 psi/kPa	PPC5083ZR	PPC5283ZR	PPC5043ZR	PPC5343ZR	PPC5063ZR	PPC5463ZR
0/100 psi/kPa	PPC5084ZR	PPC5284ZR	PPC5044ZR	PPC5344ZR	PPC5064ZR	PPC5464ZR
0/160 psi/kPa	PPC5085ZR	PPC5285ZR	PPC5045ZR	PPC5345ZR	**PPC5065ZR**	PPC5465ZR
0/200 psi/kPa	PPC5086ZR	PPC5286ZR	PPC5046ZR	PPC5346ZR	PPC5066ZR	PPC5466ZR
0/300 psi/kPa	PPC5087ZR	PPC5287ZR	PPC5047ZR	PPC5347ZR	PPC5067ZR	PPC5467ZR
0/400 psi/kPa	PPC5088ZR	PPC5288ZR	PPC5048ZR	PPC5348ZR	PPC5068ZR	PPC5468ZR
0/600 psi/kPa	PPC5089ZR	PPC5289ZR	PPC5049ZR	PPC5349ZR	PPC5069ZR	PPC5469ZR
0/800 psi/kPa	PPC5099ZR	PPC5299ZR	PPC5058ZR	PPC5358ZR	PPC5078ZR	PPC5478ZR
0/1,000 psi/kPa	PPC5098ZR	PPC5298ZR	PPC5050ZR	PPC5350ZR	PPC5070ZR	PPC5470ZR
Connection	**1/2"**	**1/2"**	**1/4"**	**1/4"**	**1/2"**	**1/2"**
0/800 psi/kPa	PPC5188ZR	PPC5198ZR	PPC5058ZR	PPC5358ZR	PPC5078ZR	PPC5478ZR
0/1,000 psi/kPa	PPC5090ZR	PPC5290ZR	PPC5050ZR	PPC5350ZR	PPC5070ZR	PPC5470ZR
0/1,500 psi/kPa	PPC5091ZR	PPC5291ZR	PPC5051ZR	PPC5351ZR	PPC5071ZR	PPC5471ZR
0/2,000 psi/kPa	PPC5092ZR	PPC5292ZR	PPC5052ZR	PPC5352ZR	PPC5072ZR	PPC5472ZR
0/3,000 psi/kPa	PPC5093ZR	PPC5293ZR	PPC5053ZR	PPC5353ZR	PPC5073ZR	PPC5473ZR
0/5,000 psi/kPa	PPC5094ZR	PPC5294ZR	PPC5054ZR	PPC5354ZR	PPC5074ZR	PPC5474ZR
0/10,000 psi/kPa	PPC5095ZR	PPC5295ZR	PPC5055ZR	PPC5355ZR	PPC5075ZR	PPC5475ZR
0/15,000 psi/kPa	PPC5096ZR	PPC5296ZR	PPC5056ZR	PPC5356ZR	PPC5076ZR	PPC5476ZR
0/20,000 psi/kPa	PPC5097ZR	PPC5297ZR	PPC5057ZR	PPC5357ZR	PPC5077ZR	PPC5477ZR

Other ranges and connection sizes available upon request. For scale change, refer to How to Order Guide for scale codes. 1/2" NPT brass available on ranges below 1,000 psi/kPa. **For options, attach suffix to end of order code: i.e. PPC5284ZR-FMR for FLUSH MOUNTED RING.**

Option suffix:

CS = Carbon steel socket/stainless steel tube
FMR = Flush mounted ring
HCSF = 4.5" (115mm) Solid front hinged case (back connection only)
MAXI45 = 4.5" (115mm) Maxi pointer
MS = Monel® tube and socket
SG-45 = 4.5" (115mm) Safety glass

For Win**BRIGHT** dial options refer to Custom Dials

1. Optional Front Flange
2. Optional Back Flange

Description & Features:

- High quality, commercial grade gauge at an economical price
- ±1% accuracy
- Steel and aluminum cases
- Brass wetted parts
- ASME B40.100 compliant (EN837-1 available)
- CRN registered
- 5 year warranty

Applications:

- Commercial installations, plumbing, heating and cooling

Specifications	
Dial	3.5” (90mm), 4” (100mm), 4.5” (115mm), 6” (150mm) white aluminum with black and red markings
Case	3.5” (90mm), 4” (100mm): Steel painted black 4.5” (115mm): Aluminum 6” (150mm) Bottom: Steel painted black 6” (150mm) Back: Aluminum
Lens	3.5” (90mm), 4.5” (115mm) Bottom connection, 6” (150mm): Glass 4” (100mm), 4.5” (115mm) Back connection: Polycarbonate
Ring	3.5” (90mm), 4” (100mm), 4.5” (115mm) Bottom connection: Polished brass 6” (150mm) Bottom connection: Steel painted black 4.5” (115mm) Back connection, 6” (150mm) back connection: SS, polished
Socket	Brass
Connection	1/4” NPT standard
Bourdon Tube	Phosphor bronze
Pointer	Black aluminum
Welding	Silver alloy
Over-pressure Limit	25% of full scale value
Working Pressure	Maximum 75% of full scale value
Ambient/Process Temperature	-40°F to 200°F (-40°C to 93°C)
Accuracy	±1% ANSI/ASME Grade 1A
Enclosure Rating	IP52
Warning	⚠ **WARNING:** This product can expose you to chemicals including lead, which is known to the State of California to cause cancer and birth defects or other reproductive harm. For more information go to www.P65Warnings.ca.gov.

Order Codes (products in bold are normally stock in North America)

Dial Size	3.5” (90mm)		4” (100mm)	4.5” (115mm)		6” (150mm)	
Case Material	Steel			Aluminum		Steel	Aluminum
Connection	Bottom	Centre Back		Bottom	Lower Back	Bottom	Lower Back
30” Hg Vac/kPa	P1S234	P1S560	P1S460	P1S410	P1S430	P1S250	P1S475
30”/0/15 psi/kPa	P1S230	P1S568	P1S468	P1S411	P1S431	P1S251C	P1S476
30”/0/30 psi/kPa	P1S231	P1S569	P1S469	P1S412	P1S432	P1S252C	P1S477
30”/0/60 psi/kPa	**P1S232**	P1S570	P1S470	P1S413	P1S433	P1S259C	P1S478
30”/0/100 psi/kPa	P1S233	P1S571	P1S471	P1S414	P1S434	P1S253C	P1S479
30”/0/160 psi/kPa	**P1S229**	P1S572	P1S472	P1S416	P1S436	P1S254C	P1S480
30”/0/200 psi/kPa	-	P1S573	-	P1S417	P1S437	P1S255C	P1S481
30”/0/300 psi/kPa	P1S227	P1S574	P1S473	P1S418	P1S438	P1S256C	P1S482
0/15 psi/kPa	P1S228	P1S561	P1S461	P1S419	P1S439	-	-
0/30 psi/kPa	P1S235	P1S562	P1S462	**P1S420**	P1S440	**P1S251**	P1S483
0/60 psi/kPa	P1S236	P1S563	P1S463	P1S421	P1S441	P1S252	P1S484
0/100 psi/kPa	**P1S237**	**P1S564**	P1S464	**P1S422**	P1S442	P1S253	P1S485
0/160 psi/kPa	**P1S238**	P1S565	P1S465	P1S423	P1S443	P1S254	P1S486
0/200 psi/kPa	**P1S239**	P1S566	P1S466	P1S424	P1S444	**P1S255**	P1S487
0/300 psi/kPa	**P1S240**	P1S567	P1S467	**P1S426**	P1S446	P1S256	P1S488
0/600 psi/kPa	-	-	-	P1S490	-	-	-
0/1,000 psi/kPa	-	-	-	P1S491	-	-	-
0/3,000 psi/kPa	-	-	-	P1S492	-	-	-
0/5,000 psi/kPa	-	-	-	P1S493	-	-	-

Other ranges and connection sizes available upon request. For scale change, refer to How to Order Guide for scale codes.
For options, attach suffix to end of order code: i.e. P1S420-45QBF for BACK FLANGE.

Option suffix:
35QBF = 3.5” (90mm) Back flange
4QBF = 4” (100mm) Back flange
45QBF = 4.5” (115mm) Back flange
6QBF = 6” (150mm) Back flange
EN = EN837-1 compliant
MAXI45 = 4.5” (115mm) Maxi pointer
MAXI6 = 6” (150mm) Maxi pointer

Note: Syphon recommended for all steam applications

3.5” Bottom Connection

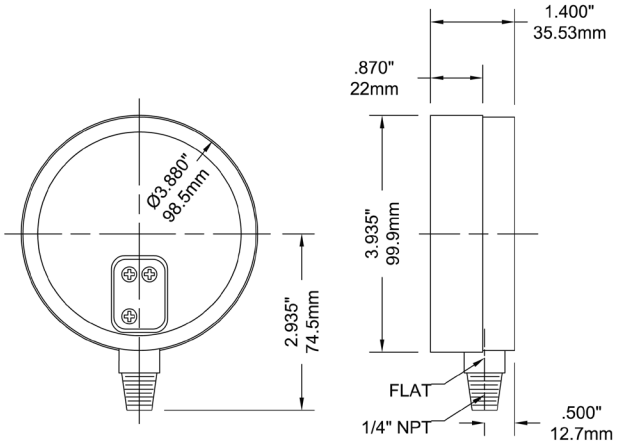

3.5” Back Connection

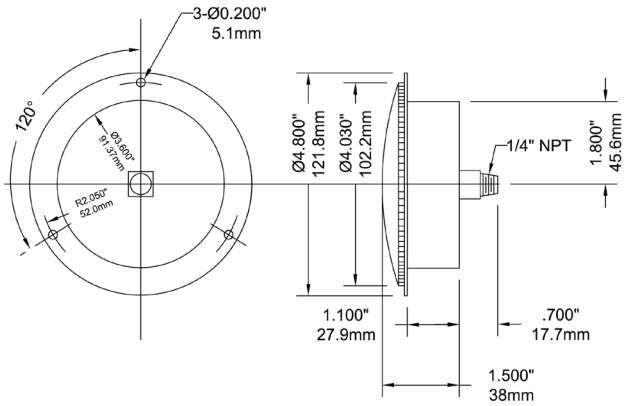

Front flange is a standard integral part of the 3.5” back connection case

4” Centre Back Connection

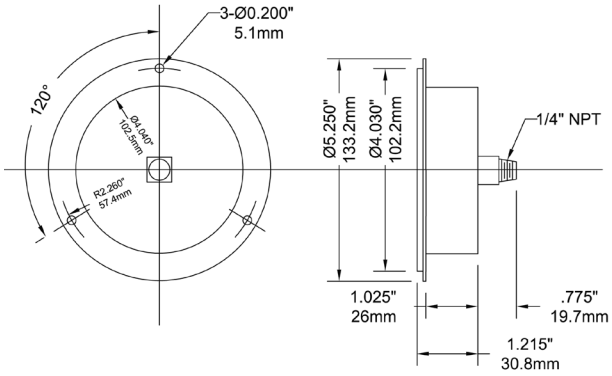

4.5” Bottom Connection

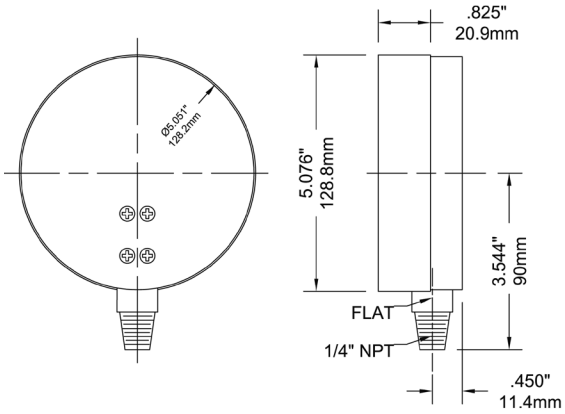

4.5” Lower Back Connection

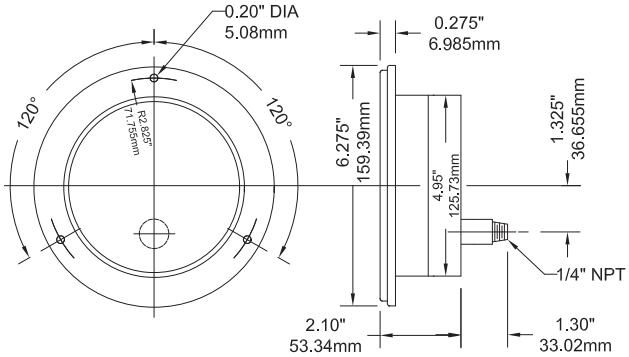

6” Bottom Connection

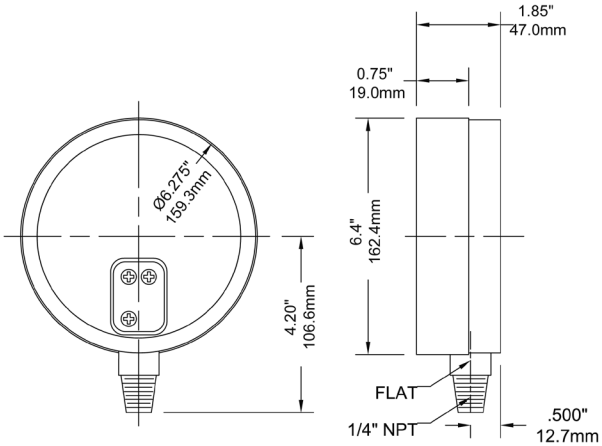

6” Back Connection with Front Flange

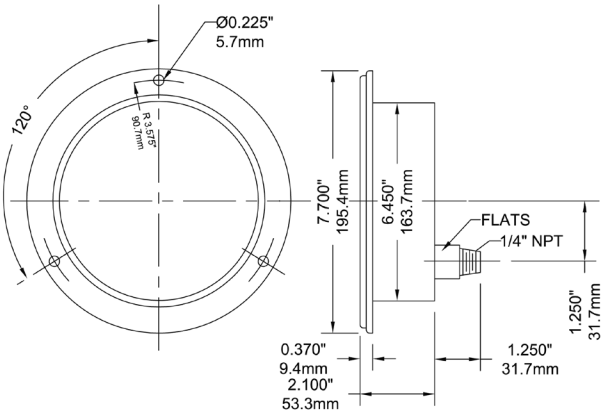

P3S 300 Series Gauge

1

1. Back Connection with Standard (on all dial sizes) Front Flange

Description & Features:

- Heavy duty, highly accurate aluminum case gauge
- ±0.5% accuracy
- Brass or stainless steel internals
- Large, easy-to-read dial
- StabiliZR™ dampened movement available on 4.5” (115mm) dial size
- ASME B40.100 compliant
- CRN registered
- 5 year warranty

Applications:

- Intended for non-clogging installations
- Use on air, steam, oil, fresh water
- Boilers, control rooms and chillers

Specifications	Stainless Steel Internals	Brass Internals
Dial	4.5” (115mm), 6” (150mm), 8.5” (215mm) and 10” (250mm) white aluminum with black and red markings	4.5” (115mm), 6” (150mm), 8.5” (215mm) and 10” (250mm) white aluminum with black and red markings
Case	Aluminum painted black	Aluminum painted black
Front Flange	4.5” (115mm), 6” (150mm): SS, polished 8.5” (215mm), 10” (250mm): Aluminum, painted black	4.5” (115mm), 6” (150mm): SS, polished 8.5” (215mm), 10” (250mm): Aluminum, painted black
Back Flange	4.5” (115mm), 6” (150mm): Steel, painted black (optional) 8.5” (215mm), 10” (250mm): Aluminum, painted black	4.5” (115mm), 6” (150mm): Steel, painted black (optional) 8.5” (215mm), 10” (250mm): Aluminum, painted black
Lens	4.5” (115mm), 6” (150mm): Glass 8.5” (200mm), 10” (250mm): Polycarbonate	4.5” (115mm), 6” (150mm): Glass 8.5” (200mm), 10” (250mm): Polycarbonate
Ring	4.5” (115mm), 6” (150mm): SS, polished 8.5” (215mm), 10” (250mm): Aluminum	4.5” (115mm), 6” (150mm): SS, polished 8.5” (215mm), 10” (250mm): Aluminum
Socket	316L SS	Brass
Connection	1/4” NPT for ranges up to 600 psi (4,137 kPa), 1/2” NPT for ranges over 600 psi (4,137 kPa)	1/4” NPT for ranges up to 600 psi (4,137 kPa), 1/2” NPT for ranges over 600 psi (4,137 kPa)
Bourdon Tube	316L SS	Phosphor bronze for ranges up to 600 psi (4,137 kPa) 316L SS for ranges over 600 psi (4,137 kPa)
Movement	304 SS	Brass
Pointer	Aluminum, anodized black, micrometer adjustable	Aluminum, anodized black, micrometer adjustable
Welding	316L SS TIG Argonarc	Tin/copper alloy for ranges up to 600 psi (4,137 kPa) Silver alloy for ranges over 600 psi (4,137 kPa)
Over-pressure Limit	30% for pressures up to 600 psi (4,137 kPa), 25% for pressures 601 psi to 1,400 psi (4,137 kPa to 9,653 kPa), 15% for pressures over 1,400 psi (9,653 kPa)	30% for pressures up to 600 psi (4,137 kPa), 25% for pressures 601 psi to 1,400 psi (4,137 kPa to 9,653 kPa), 15% for pressures over 1,400 psi (9,653 kPa)
Working Pressure	Maximum 75% of full scale value	Maximum 75% of full scale value
Ambient/Process Temperature	-40°F to 150°F (-40°C to 65°C)	-40°F to 150°F (-40°C to 65°C)
Accuracy	±0.5% ANSI/ASME Grade 2A	±0.5% ANSI/ASME Grade 2A
Enclosure Rating	IP52	IP52
Warning (brass internals only)	N/A	⚠ **WARNING:** This product can expose you to chemicals including lead, which is known to the State of California to cause cancer and birth defects or other reproductive harm. For more information go to www.P65Warnings.ca.gov.

Order Codes

	Dial Size	4.5" (115mm)				6" (150mm)			
	Connection	Bottom	Back (LB)	Bottom	Back (LB)	Bottom	Back (LB)	Bottom	Back (LB)
	Movement, Socket, Tube	Brass		SS		Brass		SS	
1/4"	30" Hg Vac/kPa	P3S6000	P3S6000B	P3S6025	P3S6025B	P3S6075	P3S6075B	P3S6260	P3S6260B
1/4"	30"/0/15 psi/kPa	P3S6001	P3S6001B	P3S6026	P3S6026B	P3S6076	P3S6076B	P3S6261	P3S6261B
1/4"	30"/0/30 psi/kPa	P3S6002	P3S6002B	P3S6027	P3S6027B	P3S6077	P3S6077B	P3S6162	P3S6162B
1/4"	30"/0/60 psi/kPa	P3S6003	P3S6003B	P3S6028	P3S6028B	P3S6078	P3S6078B	P3S6163	P3S6163B
1/4"	30"/0/100 psi/kPa	P3S6004	P3S6004B	P3S6029	P3S6029B	P3S6079	P3S6079B	P3S6164	P3S6164B
1/4"	30"/0/160 psi/kPa	P3S6005	P3S6005B	P3S6030	P3S6030B	P3S6080	P3S6080B	P3S6265	P3S6265B
1/4"	30"/0/200 psi/kPa	P3S6006	P3S6006B	P3S6031	P3S6031B	P3S6081	P3S6081B	P3S6266	P3S6266B
1/4"	30"/0/300 psi/kPa	P3S6007	P3S6007B	P3S6032	P3S6032B	P3S6082	P3S6082B	P3S6267	P3S6267B
1/4"	0/15 psi/kPa	P3S6008	P3S6008B	P3S6033	P3S6033B	P3S6083	P3S6083B	P3S6098	P3S6098B
1/4"	0/30 psi/kPa	P3S6009	P3S6009B	P3S6034	P3S6034B	P3S6084	P3S6084B	P3S6099	P3S6099B
1/4"	0/60 psi/kPa	P3S6010	P3S6010B	P3S6035	P3S6035B	P3S6085	P3S6085B	P3S6100	P3S6100B
1/4"	0/100 psi/kPa	P3S6011	P3S6011B	P3S6036	P3S6036B	P3S6086	P3S6086B	P3S6101	P3S6101B
1/4"	0/160 psi/kPa	P3S6012	P3S6012B	P3S6037	P3S6037B	P3S6087	P3S6087B	P3S6102	P3S6102B
1/4"	0/200 psi/kPa	P3S6013	P3S6013B	P3S6038	P3S6038B	P3S6088	P3S6088B	P3S6103	P3S6103B
1/4"	0/300 psi/kPa	P3S6014	P3S6014B	P3S6039	P3S6039B	P3S6089	P3S6089B	P3S6104	P3S6104B
1/4"	0/400 psi/kPa	P3S6015	P3S6015B	P3S6040	P3S6040B	P3S6090	P3S6090B	P3S6105	P3S6105B
1/4"	0/600 psi/kPa	P3S6016	P3S6016B	P3S6041	P3S6041B	P3S6091	P3S6091B	P3S6106	P3S6106B
1/2"	0/1,000 psi/kPa	P3S6017	P3S6017B	P3S6042	P3S6042B	P3S6092	P3S6092B	P3S6107	P3S6107B
1/2"	0/1,500 psi/kPa	P3S6018	P3S6018B	P3S6043	P3S6043B	P3S6093	P3S6093B	P3S6108	P3S6108B
1/2"	0/2,000 psi/kPa	P3S6019	P3S6019B	P3S6044	P3S6044B	P3S6094	P3S6094B	P3S6109	P3S6109B
1/2"	0/3,000 psi/kPa	P3S6020	P3S6020B	P3S6045	P3S6045B	P3S6095	P3S6095B	P3S6110	P3S6110B
1/2"	0/5,000 psi/kPa	P3S6021	P3S6021B	P3S6046	P3S6046B	P3S6096	P3S6096B	P3S6111	P3S6111B
1/2"	0/10,000 psi/kPa	P3S6022	P3S6022B	P3S6047	P3S6047B	P3S6170	P3S6170B	P3S6180	P3S6180B
1/2"	0/15,000 psi/kPa	P3S6023	P3S6023B	P3S6160	P3S6160B	P3S6171	P3S6171B	P3S6181	P3S6181B
1/2"	0/20,000 psi/kPa	P3S6024	P3S6024B	P3S6161	P3S6161B	P3S6172	P3S6172B	P3S6182	P3S6182B
	Dial Size	8.5" (215mm)				10" (250mm)			
1/4"	30" Hg Vac/kPa	P3S6200	P3S6200B	P3S6300	P3S6300B	P3S6400	P3S6400B	P3S6500	P3S6500B
1/4"	30"/0/15 psi/kPa	P3S6201	P3S6201B	P3S6301	P3S6301B	P3S6401	P3S6401B	P3S6501	P3S6501B
1/4"	30"/0/30 psi/kPa	P3S6202	P3S6202B	P3S6302	P3S6302B	P3S6402	P3S6402B	P3S6502	P3S6502B
1/4"	30"/0/60 psi/kPa	P3S6203	P3S6203B	P3S6303	P3S6303B	P3S6403	P3S6403B	P3S6503	P3S6503B
1/4"	30"/0/100 psi/kPa	P3S6204	P3S6204B	P3S6304	P3S6304B	P3S6404	P3S6404B	P3S6504	P3S6504B
1/4"	30"/0/160 psi/kPa	P3S6205	P3S6205B	P3S6305	P3S6305B	P3S6405	P3S6405B	P3S6505	P3S6505B
1/4"	30"/0/200 psi/kPa	P3S6206	P3S6206B	P3S6306	P3S6306B	P3S6406	P3S6406B	P3S6506	P3S6506B
1/4"	30"/0/300 psi/kPa	P3S6207	P3S6207B	P3S6307	P3S6307B	P3S6407	P3S6407B	P3S6507	P3S6507B
1/4"	0/15 psi/kPa	P3S6208	P3S6208B	P3S6308	P3S6308B	P3S6408	P3S6408B	P3S6508	P3S6508B
1/4"	0/30 psi/kPa	P3S6209	P3S6209B	P3S6309	P3S6309B	P3S6409	P3S6409B	P3S6509	P3S6509B
1/4"	0/60 psi/kPa	P3S6210	P3S6210B	P3S6310	P3S6310B	P3S6410	P3S6410B	P3S6510	P3S6510B
1/4"	0/100 psi/kPa	P3S6211	P3S6211B	P3S6311	P3S6311B	P3S6411	P3S6411B	P3S6511	P3S6511B
1/4"	0/160 psi/kPa	P3S6212	P3S6212B	P3S6312	P3S6312B	P3S6412	P3S6412B	P3S6512	P3S6512B
1/4"	0/200 psi/kPa	P3S6213	P3S6213B	P3S6313	P3S6313B	P3S6413	P3S6413B	P3S6513	P3S6513B
1/4"	0/300 psi/kPa	P3S6214	P3S6214B	P3S6314	P3S6314B	P3S6414	P3S6414B	P3S6514	P3S6514B
1/4"	0/400 psi/kPa	P3S6215	P3S6215B	P3S6315	P3S6315B	P3S6415	P3S6415B	P3S6515	P3S6515B
1/4"	0/600 psi/kPa	P3S6216	P3S6216B	P3S6316	P3S6316B	P3S6416	P3S6416B	P3S6516	P3S6516B
1/2"	0/1,000 psi/kPa	P3S6217	P3S6217B	P3S6317	P3S6317B	P3S6417	P3S6417B	P3S6517	P3S6517B
1/2"	0/1,500 psi/kPa	P3S6218	P3S6218B	P3S6318	P3S6318B	P3S6418	P3S6418B	P3S6518	P3S6518B
1/2"	0/2,000 psi/kPa	P3S6219	P3S6219B	P3S6319	P3S6319B	P3S6419	P3S6419B	P3S6519	P3S6519B
1/2"	0/3,000 psi/kPa	P3S6220	P3S6220B	P3S6320	P3S6320B	P3S6420	P3S6420B	P3S6520	P3S6520B
1/2"	0/5,000 psi/kPa	P3S6221	P3S6221B	P3S6321	P3S6321B	P3S6421	P3S6421B	P3S6521	P3S6521B
1/2"	0/10,000 psi/kPa	P3S6222	P3S6222B	P3S6322	P3S6322B	P3S6422	P3S6422B	P3S6522	P3S6522B
1/2"	0/15,000 psi/kPa	P3S6223	P3S6223B	P3S6323	P3S6322B	P3S6423	P3S6423B	P3S6523	P3S6523B
1/2"	0/20,000 psi/kPa	P3S6224	P3S6224B	P3S6324	P3S6324B	P3S6424	P3S6424B	P3S6524	P3S6524B

Other ranges and connection sizes available upon request. For scale change, refer to How to Order Guide for scale codes.

Option suffix:

45BF-300 = 4.5" (115mm) Back flange
45HC = 4.5" (115mm) Hinged case
6BF-300 = 6" (150mm) Back flange
6HC = 6" (150mm) Hinged case
MAXI45 = 4.5" (115mm) Maxi pointer
MAXI6 = 6" (150mm) Maxi pointer
MS = Monel
OST = Overstop
SFC = Safety case
SG-45 = 4.5" (115mm) Safety glass
SG-6 = 6" (150mm) Safety glass
UST = Understop
ZR = StabiliZR™ movement (4.5" dial only)

4.5” Bottom Connection with Back Flange

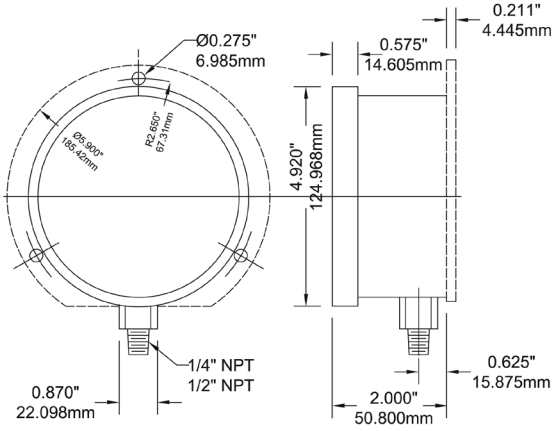

4.5” Back Connection with Front Flange

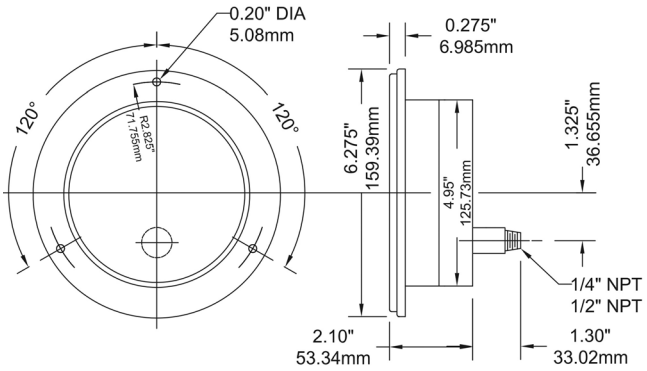

6” Bottom Connection with Back Flange

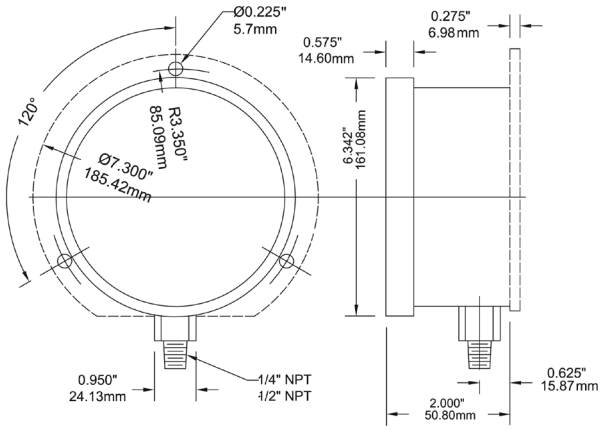

6” Back Connection with Front Flange

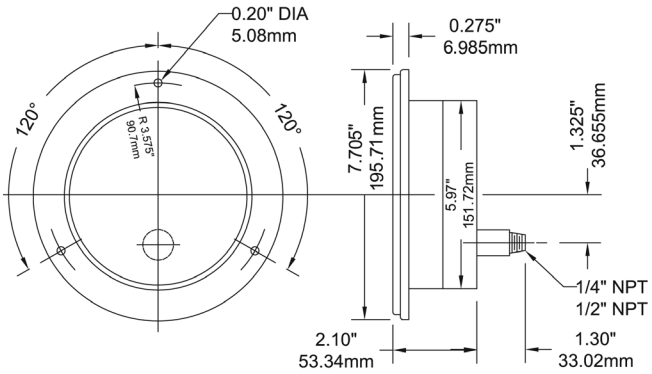

8.5” Bottom Connection with Back Flange

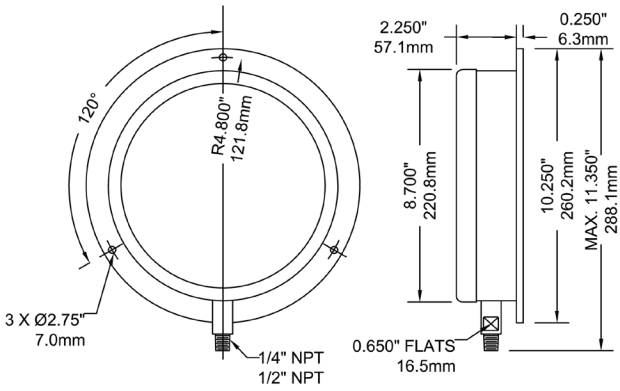

10” Back Connection with Front Flange

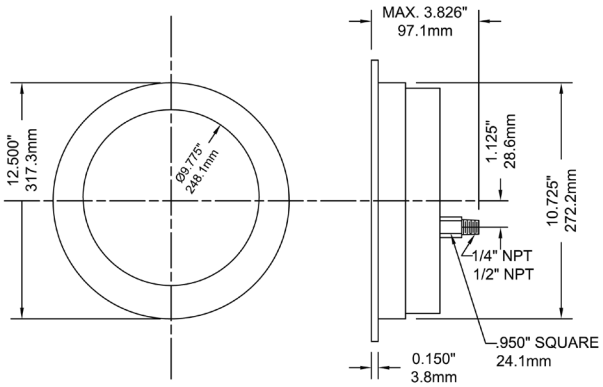

Description & Features:

- One piece forged brass case designed for severe service conditions
- Easy-to-read single or dual scale dial
- ASME B40.100 compliant
- CRN registered
- 5 year warranty

Applications:

- High vibration industrial installations including hydraulic and fracking systems

Specifications	
Dial	2.5” (63mm), 4” (100mm)
Case	Forged brass, rugged 2.5”: Liquid filled case standard, 4”: dry case standard
Lens	Polycarbonate
Ring	2.5” (63mm): Gold-coloured ABS, 4” (100mm): polished brass
Socket	Brass
Pointer	Aluminum, anodized black
Connection	2.5”(63mm): 1/4” NPT bottom or back, 4” (100mm): 1/4” or 1/2” NPT bottom
Wetted Parts	Brass
Ambient/Process Temperature	-40°F to 150°F (-40°C to 65°C)
Accuracy	2.5” (63mm): ±1.5% of full scale, 4” (100mm): ±1% ANSI/ASME Grade 1A
Enclosure Rating	IP65
Warning	⚠ **WARNING:** This product can expose you to chemicals including lead, which is known to the State of California to cause cancer and birth defects or other reproductive harm. For more information go to www.P65Warnings.ca.gov.

Single Scale Order Codes

Dial Size	2.5" (63mm)		4" (100mm)	
Connection	1/4" Bottom	1/4" Back (CB)	1/4" Bottom	1/2" Bottom
30" Hg Vac	PBC801R1	PBC900R1	PBC700R1	PBC1234R1
30"/0/15 psi	PBC790R1	PBC890R1	PBC701R1	PBC1235R1
30"/0/30 psi	PBC798R1	PBC898R1	PBC702R1	PBC1236R1
30"/0/60 psi	PBC799R1	PBC899R1	PBC703R1	PBC1237R1
30"/0/100 psi	PBC791R1	PBC891R1	PBC704R1	PBC1238R1
30"/0/150 psi	PBC792R1	PBC892R1	PBC705R1	PBC1239R1
30"/0/200 psi	PBC794R1	PBC894R1	PBC706R1	PBC1240R1
30"/0/300 psi	PBC795R1	PBC895R1	PBC707R1	PBC1241R1
0/15 psi	PBC800R1	PBC901R1	PBC708R1	PBC1242R1
0/30 psi	PBC802R1	PBC902R1	PBC709R1	PBC1243R1
0/60 psi	PBC803R1	PBC903R1	PBC710R1	PBC1244R1
0/100 psi	PBC804R1	PBC904R1	PBC711R1	PBC1245R1
0/160 psi	PBC805R1	PBC905R1	PBC712R1	PBC1246R1
0/200 psi	PBC806R1	PBC906R1	PBC713R1	PBC1247R1
0/300 psi	PBC807R1	PBC907R1	PBC714R1	PBC1248R1
0/400 psi	PBC817R1	PBC917R1	PBC715R1	PBC1249R1
0/600 psi	PBC808R1	PBC908R1	PBC716R1	PBC1250R1
0/1,000 psi	PBC809R1	PBC909R1	PBC724R1	PBC717R1
0/1,500 psi	PBC816R1	PBC914R1	PBC725R1	PBC718R1
0/2,000 psi	PBC810R1	PBC910R1	PBC726R1	PBC719R1
0/3,000 psi	PBC811R1	PBC911R1	PBC727R1	PBC720R1
0/5,000 psi	PBC812R1	PBC912R1	PBC728R1	PBC721R1
0/6,000 psi	PBC814R1	PBC915R1	PBC024R1	PBC784R1
0/10,000 psi	PBC813R1	PBC913R1	PBC729R1	PBC722R1

Dual Scale Order Codes

Dial Size	2.5" (63mm)		4" (100mm)	
Connection	1/4" Bottom	1/4" Back (CB)	1/4" Bottom	1/2" Bottom
30" Hg Vac/kPa	PBC801	PBC900	PBC700	PBC1234
30"/0/15 psi/kPa	PBC790	PBC890	PBC701	PBC1235
30"/0/30 psi/kPa	PBC798	PBC898	PBC702	PBC1236
30"/0/60 psi/kPa	PBC799	PBC899	PBC703	PBC1237
30"/0/100 psi/kPa	PBC791	PBC891	PBC704	PBC1238
30"/0/150 psi/kPa	PBC792	PBC892	PBC705	PBC1239
30"/0/200 psi/kPa	PBC794	PBC894	PBC706	PBC1240
30"/0/300 psi/kPa	PBC795	PBC895	PBC707	PBC1241
0/15 psi/kPa	PBC800	PBC901	PBC708	PBC1242
0/30 psi/kPa	PBC802	PBC902	PBC709	PBC1243
0/60 psi/kPa	PBC803	PBC903	PBC710	PBC1244
0/100 psi/kPa	PBC804	PBC904	PBC711	PBC1245
0/160 psi/kPa	PBC805	PBC905	PBC712	PBC1246
0/200 psi/kPa	PBC806	PBC906	PBC713	PBC1247
0/300 psi/kPa	PBC807	PBC907	PBC714	PBC1248
0/400 psi/kPa	PBC817	PBC917	PBC715	PBC1249
0/600 psi/kPa	PBC808	PBC908	PBC716	PBC1250
0/1,000 psi/kPa	PBC809	PBC909	PBC724	PBC717
0/1,500 psi/kPa	PBC816	PBC914	PBC725	PBC718
0/2,000 psi/kPa	PBC810	PBC910	PBC726	PBC719
0/3,000 psi/kPa	PBC811	PBC911	PBC727	PBC720
0/5,000 psi/kPa	PBC812	PBC912	PBC728	PBC721
0/6,000 psi/kPa	PBC814	PBC915	PBC024	PBC784
0/10,000 psi/kPa	PBC813	PBC913	PBC729	PBC722

Other ranges and connection sizes available upon request. For scale change, refer to How to Order Guide for scale codes. **For options, attach suffix to end of order code: i.e. PBC805-REST for RESTRICTOR SCREW.**

Option suffix:
25DRY = Supply 2.5" (63mm) gauge dry
G = Glycerin filled case
REST = Restrictor screw

2.5” Bottom Connection

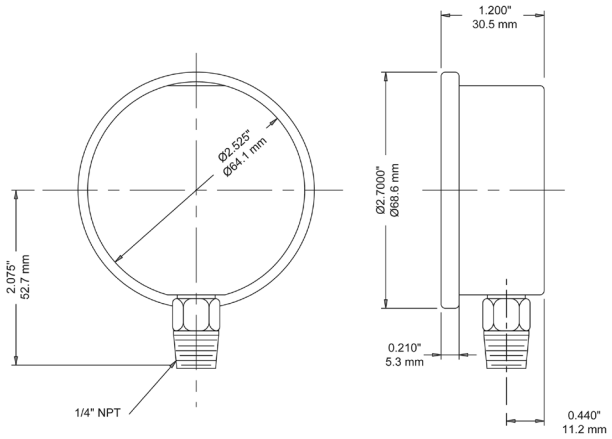

2.5” Back Connection

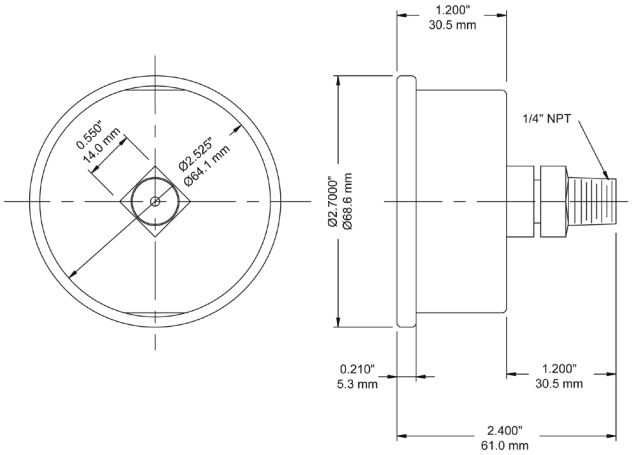

4” Bottom Connection

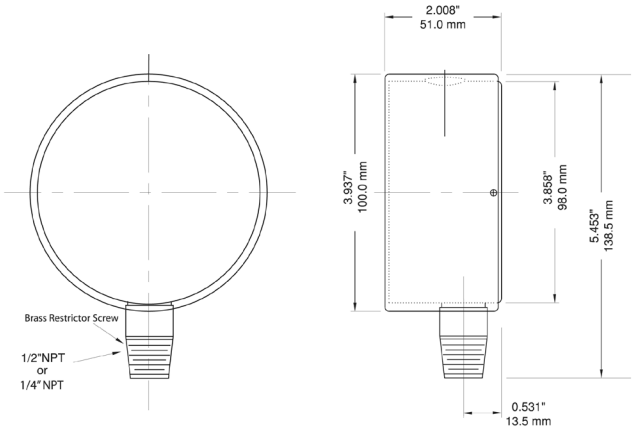

PCC Colour Coded Gauge

Description & Features:

- Unique pressure instrument utilizing colour coded cases for easy identification of processes
- 4 different colours
- Stainless steel or brass internals, liquid fillable
- ASME B40.100 compliant
- CRN registered
- 5 year warranty

Applications:

- Used for easy identification of process or pressure
- Well suited for use where vibration or pulsation exist (with liquid filling)
- Used on machinery, process lines, compressors, hydraulics

Specifications	Stainless Steel Internals	Brass Internals
Dial	4” (100mm) white aluminum with black and red markings	4” (100mm) white aluminum with black and red markings
Case	PBT Polybutylene terephthalate - colour coded	PBT Polybutylene terephthalate - colour coded
Lens	Polycarbonate	Polycarbonate
Ring	PBT Polybutylene terephthalate - colour coded	PBT Polybutylene terephthalate - colour coded
Socket	316L SS	OT 58 brass
Connection	1/4” NPT or 1/2” NPT standard	1/4” NPT or 1/2” NPT standard
Bourdon Tube	316L SS, drawn seamless	Phosphor bronze
Movement	304 SS	Gears are OT 59 brass, plates are AISI 304 SS
Pointer	Aluminum, anodized black, micrometer adjustable	Aluminum, anodized black
Welding	TIG, silver alloy	Tin/copper alloy for pressures up to 600 psi (4,137 kPa), Silver alloy for pressures over 600 psi (4,137 kPa)
Over-pressure Limit	30% for pressures up to 600 psi (4,137 kPa), 15% for pressures over 600 psi (4,137 kPa)	25% for pressures up to 1,400 psi (9,653 kPa), 15% for pressures over 1,400 psi (9,653 kPa)
Gasket Material	EPDM	Silicone rubber for socket, EPDM for lens, filling plug and blow-out vent
Working Pressure	Maximum 75% of full scale value	Maximum 75% of full scale value
Ambient/Process Temperature	Dry: -40°F to 200°F (-40°C to 93°C) Glycerin Filled: -40°F to 150°F (-40°C to 65°C)	Dry: -40°F to 200°F (-40°C to 93°C) Glycerin Filled: -40°F to 150°F (-40°C to 65°C)
Accuracy	±1% ANSI/ASME Grade 1A	±1% ANSI/ASME Grade 1A
Enclosure Rating	IP65 per EN60529-1 (IEC529-1)	IP65 per EN60529-1 (IEC529-1)
Warning (brass internals only)	N/A	⚠ **WARNING:** This product can expose you to chemicals including lead, which is known to the State of California to cause cancer and birth defects or other reproductive harm. For more information go to www.P65Warnings.ca.gov.

Order Codes (products in bold are normally stock in North America)

Dial Size	4" (100mm)			
Connection	1/4" Bottom	1/2" Bottom	1/4" Bottom	1/2" Bottom
Movement, Socket, Tube	Brass		SS	
30" Hg Vac/kPa	PCC600C	-	PCC640C	PCC655C
30"/0/15 psi/kPa	PCC1020C	-	PCC1036C	PCC1044C
30"/0/30 psi/kPa	PCC1021C	-	PCC1037C	PCC1045C
30"/0/60 psi/kPa	PCC1022C	-	PCC1038C	PCC1046C
30"/0/100 psi/kPa	PCC1023C	-	PCC1039C	PCC1047C
30"/0/160 psi/kPa	PCC1024C	-	PCC1040C	PCC1048C
30"/0/200 psi/kPa	PCC1026C	-	PCC1042C	PCC1050C
30"/0/300 psi/kPa	PCC1027C	-	PCC1043C	PCC1051C
0/15 psi/kPa	**PCC601C**	-	PCC641C	PCC656C
0/30 psi/kPa	**PCC602C**	-	PCC642C	PCC657C
0/60 psi/kPa	**PCC603C**	-	PCC643C	PCC658C
0/100 psi/kPa	**PCC604C**	-	PCC644C	PCC659C
0/160 psi/kPa	**PCC605C**	-	PCC645C	PCC660C
0/200 psi/kPa	**PCC606C**	-	PCC646C	PCC661C
0/300 psi/kPa	PCC607C	-	PCC647C	PCC662C
0/400 psi/kPa	PCC610C	-	PCC650C	PCC666C
0/600 psi/kPa	PCC608C	-	PCC648C	PCC663C
0/1,000 psi/kPa	PCC609C	PCC624C	PCC649C	PCC664C
0/1,500 psi/kPa	-	PCC625C	-	PCC665C
0/2,000 psi/kPa	-	PCC626C	-	PCC667C
0/3,000 psi/kPa	-	PCC627C	-	PCC668C
0/5,000 psi/kPa	-	PCC628C	-	PCC669C
0/10,000 psi/kPa	-	PCC629C	-	PCC670C
0/15,000 psi/kPa	-	PCC630C	-	PCC671C
0/20,000 psi/kPa	-	PCC639C	-	PCC672C

Other ranges and connection sizes available upon request. For scale change, refer to How to Order Guide for scale codes. **For options, attach suffix to end of order code: i.e. PCC603C-G for GLYCERIN FILL.**

Colour Coded Cases	Colour	Suffix
	Red	1Y
	Yellow	2Y
	Black	3Y
	Blue	4Y

Add appropriate colour code as suffix.
(e.g. PCC662C1Y = Gauge Order Code + Case Colour Code)

Option suffix:
G = Glycerin filled case
SG4 = 4" (100mm) Safety glass lens

4" Bottom Connection

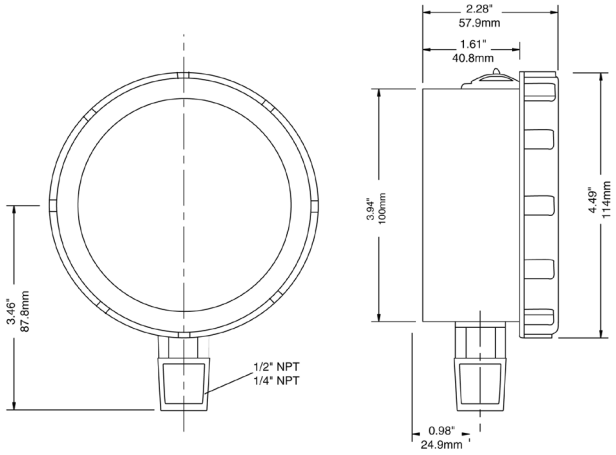

PCT, PCT-LF

Contractor Gauge
Lead Free Contractor Gauge

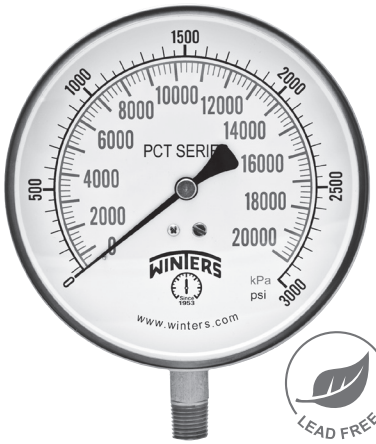

Description & Features:

- Economical 4.5” (115mm) stainless steel case gauge
- Brass or lead free brass wetted parts
- ±1% accuracy
- Zero adjustment screw
- 1/4” NPT
- Restricted orifice
- ASME B40.100 compliant
- CRN registered
- Lead free version NSF-61-372 certified
- 5 year warranty

Applications:

- Most commercial air, water and steam services (with syphon)
- Lead free version for potable water systems

Specifications	
Dial	4.5” (115mm) white aluminum with black and red markings
Case	304 SS
Lens	Acrylic
Ring	304 SS
Socket	PCT: Brass PCT-LF: Lead free brass, NSF-61-372 certified
Connection	1/4” NPT standard
Bourdon Tube	Phosphor bronze
Movement	PCT: Brass, PCT-LF: Lead free brass, NSF-61-372 certified
Pointer	Aluminum, anodized black, recalibrator screw
Welding	Silver solder
Over-pressure Limit	25% for pressures up to 1,450 psi (9,998 kPa), 15% for pressures over 1,450 psi (9,998 kPa)
Working Pressure	Maximum 75% of full scale value
Ambient/Process Temperature	-40°F to 200°F (-40°C to 93°C)
Accuracy	±1% ANSI/ASME Grade 1A
Enclosure Rating	IP52
Warning	**WARNING:** This product can expose you to chemicals including lead, which is known to the State of California to cause cancer and birth defects or other reproductive harm. For more information go to www.P65Warnings.ca.gov.

PCT Order Codes (products in bold are normally stock in North America)

Connection	1/4” Bottom
30” Hg Vac/kPa	PCT320
30”/0/30 psi/kPa	**PCT329**
30”/0/60 psi/kPa	PCT330
30”/0/100 psi/kPa	**PCT328**
30”/0/160 psi/kPa	PCT332
30”/0/200 psi/kPa	PCT333
30”/0/300 psi/kPa	PCT334
0/15 psi/kPa	**PCT319**
0/30 psi/kPa	**PCT321**
0/60 psi/kPa	**PCT322**
0/100 psi/kPa	**PCT323**
0/160 psi/kPa	**PCT324**
0/200 psi/kPa	**PCT325**
0/300 psi/kPa	**PCT326**
0/400 psi/kPa	**PCT327**
0/600 psi/kPa	**PCT331**
0/1,000 psi/kPa	PCT293
0/3,000 psi/kPa	PCT294
0/5,000 psi/kPa	PCT295

PCT-LF Order Codes (products in bold are normally stock in North America)

Connection	1/4” Bottom
30” Hg Vac/kPa	**PCT320LF**
30”/0/30 psi/kPa	PCT329LF
30”/0/60 psi/kPa	PCT330LF
30”/0/100 psi/kPa	PCT328LF
30”/0/160 psi/kPa	PCT332LF
30”/0/200 psi/kPa	PCT333LF
30”/0/300 psi/kPa	PCT334LF
0/15 psi/kPa	**PCT319LF**
0/30 psi/kPa	PCT321LF
0/60 psi/kPa	**PCT322LF**
0/100 psi/kPa	**PCT323LF**
0/160 psi/kPa	**PCT324LF**
0/200 psi/kPa	**PCT325LF**
0/300 psi/kPa	**PCT326LF**
0/400 psi/kPa	**PCT327LF**
0/600 psi/kPa	PCT331LF
0/1,000 psi/kPa	PCT293LF
0/3,000 psi/kPa	PCT294LF
0/5,000 psi/kPa	PCT295LF

Other ranges and connection sizes available upon request. For scale change, refer to How to Order Guide for scale codes. **For options, attach suffix to end of order code: i.e. PCT322-45BF for BACK FLANGE.**

Option suffix:
45BF = 4.5” (115mm) Back flange

4.5” Bottom

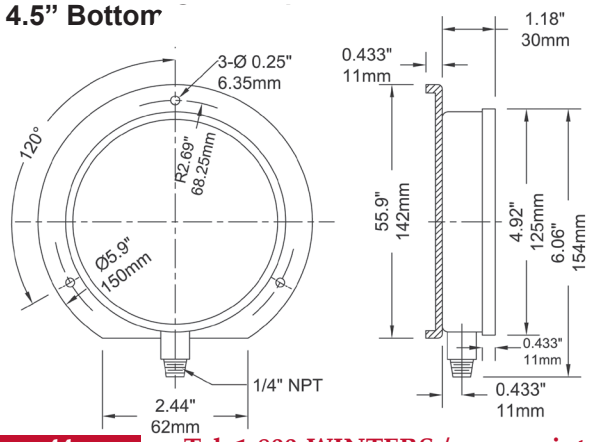

Premium Stainless Steel Liquid Filled Gauge

PFP

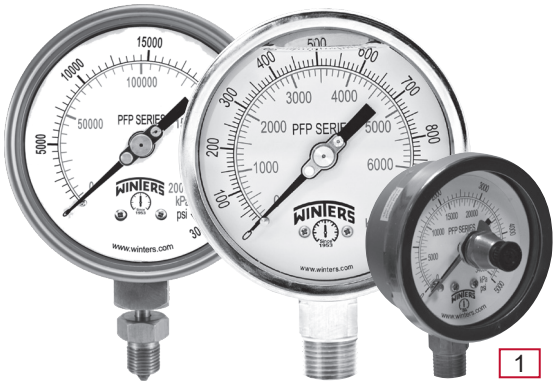

1. Maximum Indicating Pointer

RoHS compliant

Note: RoHS applies to SS internals only

Description & Features:

- Liquid filled stainless steel case protects against vibration and pulsation
- Bayonet ring
- Highly accurate
- Back, bottom, or panel mounted
- Under and overload stops
- Ventable plug on 2.5” to 4.5” stainless steel and 4.5” brass bottom mount and 4” stainless steel back mount
- Stainless steel or brass wetted parts
- Restrictor screw standard on dual scale (optional on single scale)
- Dry case available
- ASME B40.100 compliant (EN837-1 available)
- CRN registered
- 5 year warranty

Applications:

- Outdoor and severe ambient and process conditions
- Use where harmful vibration and pulsation are present
- Hydraulic equipment, oil field equipment, pumps, compressors and process industries

Specifications	Stainless Steel Internals	Brass Internals
Dial	2.5” (63mm), 4” (100mm), 4.5” (115mm), 6” (150mm) white aluminum with black and red markings	4” (100mm), 4.5” (115mm) white aluminum with black and red markings
Case	AISI 304 SS	AISI 304 SS
Lens	Polycarbonate, High pressure BSP(G) and HP: Tempered safety glass	Polycarbonate
Ring	AISI 304 SS	AISI 304 SS
Socket	316L SS, 2.5” (63mm) to 4.5” (115mm): Welded one-piece socket	OT 58 brass
Connection	1/4” NPT or 1/2” NPT standard, High Pressure: 1/2” BSP(G) or 9/16” autoclave or 1/4” autoclave with 9/16” gland/collar	1/4” NPT or 1/2” NPT standard
Bourdon Tube	316L SS, drawn seamless	Phosphor bronze
Movement	304 SS (under and overload stops 4” to 6”)	OT 59 brass (under and overload stops 4”)
Pointer	2.5” (63mm): Aluminum, anodized black, 4” (100mm), 4.5” (115mm), 6” (150mm): Aluminum, anodized black, micrometer adjustable	4” (100mm), 4.5” (115mm): Aluminum, anodized black
Welding	Laser welded socket to case	Silver alloy
Fill Liquid	Glycerin	Glycerin
Over-pressure Limit	25% for pressures up to 1,450 psi (9,998 kPa), 15% for pressures over 1,450 psi (9,998 kPa)	25% for pressures up to 1,450 psi (9,998 kPa), 15% for pressures over 1,450 psi (9,998 kPa)
Socket Gasket	2.5” (63mm), 4” (100mm), 4.5” (115mm): Welded (no gasket) 6” (150mm): Buna N for one-piece external socket seal, (silicone rubber option)	Buna N for two-piece internal socket seal
Fill Plug	Buna N (silicone rubber option)	Buna N (silicone rubber option)
Lens Ring Gasket	Buna N (silicone rubber option)	Buna N (silicone rubber option)
Working Pressure	Maximum 75% of full scale value	Maximum 75% of full scale value
Ambient Temperature	Dry: -40°F to 250°F (-40°C to 120°C) Glycerin Filled: -4°F to 150°F (-20°C to 65°C)	Dry: -40°F to 200°F (-40°C to 93°C) Glycerin Filled: -4°F to 150°F (-20°C to 65°C)
Process Temperature	-40°F to 250°F (-40°C to 120°C)	-40°F to 200°F (-40°C to 93°C)
Accuracy	2.5” (63mm): ±1.5% of full scale value 4” (100mm), 4.5” (115mm), 6” (150mm): ±1% ANSI/ ASME Grade 1A	4” (100mm), 4.5” (115mm): ±1% ANSI/ASME Grade 1A
Enclosure Rating	NEMA 4X/IP66, EN60529-1 (IEC529-1)	NEMA 4X/IP66, EN60529-1 (IEC529-1)
Warning (brass internals only)	N/A	**WARNING:** This product can expose you to chemicals including lead, which is known to the State of California to cause cancer and birth defects or other reproductive harm. For more information go to www.P65Warnings.ca.gov.

Single Scale Order Codes (products in bold are normally stock in North America)

Dial Size	2.5” (63mm)		4” (100mm)			
Connection	1/4” Bottom	1/4” Back (CB)	1/4” Bottom	1/4” Back (LB)	1/2” Bottom	1/2” Back (LB)
Movement, Socket, Tube	SS					
30” Hg Vac	**PFP820R1**	PFP840R1	PFP640R1	PFP1090R1	PFP655R1	-
30”/0/15 psi	PFP860R1	PFP870R1	PFP1036R1	PFP1244R1	PFP1044R1	-
30”/0/30 psi	**PFP861R1**	PFP871R1	PFP1037R1	PFP1245R1	PFP1045R1	-
30”/0/60 psi	PFP862R1	PFP872R1	PFP1038R1	PFP1246R1	PFP1046R1	-
30”/0/100 psi	PFP863R1	PFP873R1	PFP1039R1	PFP1247R1	PFP1047R1	-
30”/0/150 psi	PFP864R1	PFP874R1	PFP1040R1	PFP1248R1	PFP1048R1	-
30”/0/200 psi	PFP866R1	PFP876R1	PFP1042R1	PFP1249R1	PFP1050R1	-
30”/0/300 psi	PFP867R1	PFP877R1	PFP1043R1	PFP1250R1	PFP1051R1	-
0/15 psi	**PFP821R1**	**PFP921R1**	PFP641R1	PFP1091R1	PFP656R1	-
0/30 psi	**PFP822R1**	PFP922R1	PFP642R1	PFP1092R1	PFP657R1	-
0/60 psi	**PFP823R1**	**PFP923R1**	PFP643R1	PFP1093R1	PFP658R1	-
0/100 psi	**PFP824R1**	PFP924R1	PFP644R1	PFP1094R1	**PFP659R1**	-
0/160 psi	**PFP825R1**	**PFP925R1**	PFP645R1	PFP1095R1	**PFP660R1**	-
0/200 psi	**PFP826R1**	**PFP926R1**	PFP646R1	PFP1096R1	**PFP661R1**	-
0/300 psi	**PFP827R1**	PFP927R1	PFP647R1	PFP1097R1	**PFP662R1**	-
0/400 psi	PFP880R1	PFP881R1	PFP650R1	PFP1251R1	PFP666R1	-
0/600 psi	PFP828R1	PFP928R1	PFP648R1	PFP1098R1	**PFP663R1**	-
0/1,000 psi	PFP829R1	PFP929R1	PFP649R1	PFP1099R1	PFP664R1	-
0/1,500 psi	PFP834R1	PFP934R1	-	PFP1252R1	PFP665R1	PFP1190R1
0/2,000 psi	PFP830R1	PFP930R1	-	PFP1253R1	PFP667R1	PFP1191R1
0/3,000 psi	PFP831R1	PFP931R1	-	PFP1254R1	PFP668R1	PFP1192R1
0/5,000 psi	**PFP832R1**	PFP852R1	-	PFP1255R1	PFP669R1	PFP1193R1
0/6,000 psi	PFP836R1	PFP851R1	-	PFP1259R1	PFP675R1	PFP1197R1
0/10,000 psi	PFP833R1	PFP853R1	-	PFP1256R1	PFP670R1	PFP1194R1
0/15,000 psi	PFP835R1	PFP855R1	-	PFP1257R1	PFP671R1	PFP1195R1
0/20,000 psi	PFP837R1	-	-	PFP1258R1	PFP672R1	PFP1196R1

Other ranges and connection sizes available upon request. 316 SS case and mountable bezel available upon request. For scale change, refer to How to Order Guide for scale codes. **For options, attach suffix to end of order code: i.e. PFP929R1-25UC for U-CLAMP.**

Option suffix:

25BF = 2.5” (63mm) Back flange
25BOOT = 2.5” (63mm) black rubber boot
25DRY = Supply 2.5” (63mm) gauge dry
25FF = 2.5” (63mm) Front flange
25SS = 2.5” (63mm) 316 SS case
25UC = 2.5” (63mm) U-Clamp
4BF = 4” (100mm) Back flange
4FF = 4” (100mm) Front flange
4SS = 4” (100mm) SS case
4UC-P = 4” (100mm) U-Clamp premium
DRY = Supply gauge dry
EN = EN837-1 compliant
MAXI25= 2.5” (63mm) Maxi pointer
MAXI4 = 4” (100mm) Maxi pointer
REST = Restrictor screw
RSP4 = 4” (100mm) Red set pointer
SF25 = 2.5” (63mm) Silicone filled
SF4 = 4” (100mm) Silicone filled
SG-25 = 2.5” (63mm) Safety glass lens
SG-4 = 4” (100mm) Safety glass lens

For Win**BRIGHT** dial options refer to Custom Dials

2.5” Bottom Connection with Back Flange

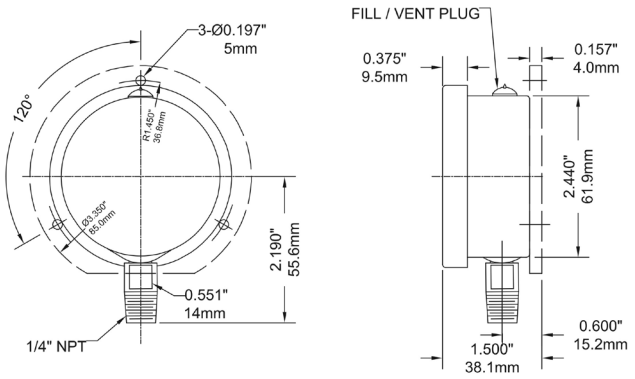

2.5” Back Connection with Front Flange

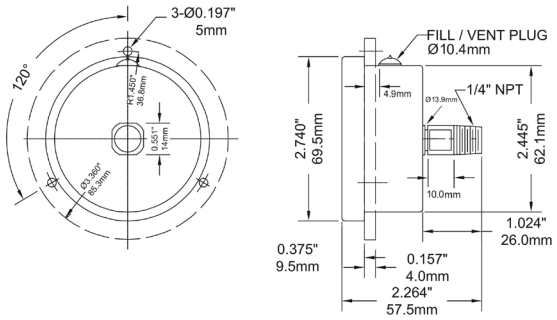

Dual Scale Order Codes (products in bold are normally stock in North America)

Dial Size	2.5" (63mm)		4" (100mm)							
Connection	1/4" Bottom	1/4" Back (CB)	1/4" Bottom	1/4" Back (LB)	1/4" Bottom	1/4" Back (LB)	1/2" Bottom	1/2" Back (LB)	1/2" Bottom	1/2" Back (LB)
Movement, Socket, Tube	SS		Brass		SS		Brass		SS	
30" Hg Vac/kPa	**PFP820**	**PFP840**	PFP600	PFP1000	PFP640	PFP1090	PFP2284	-	PFP655	PFP2308
30"/0/15 psi/kPa	PFP860	PFP870	PFP1020	PFP1028	PFP1036	PFP1244	PFP2285	-	PFP1044	PFP2309
30"/0/30 psi/kPa	**PFP861**	PFP871	PFP1021	PFP1029	PFP1037	PFP1245	PFP2286	-	PFP1045	PFP2310
30"/0/60 psi/kPa	PFP862	**PFP872**	PFP1022	PFP1030	**PFP1038**	PFP1246	PFP2287	-	PFP1046	PFP2311
30"/0/100 psi/kPa	PFP863	PFP873	PFP1023	PFP1031	PFP1039	PFP1247	PFP2288	-	PFP1047	PFP2312
30"/0/150 psi/kPa	PFP864	PFP874	PFP1024	PFP1032	PFP1040	PFP1248	PFP2289	-	PFP1048	PFP2313
30"/0/200 psi/kPa	PFP866	PFP876	PFP1026	PFP1034	PFP1042	PFP1249	PFP2290	-	PFP1050	PFP2314
30"/0/300 psi/kPa	**PFP867**	PFP877	PFP1027	PFP1035	PFP1043	PFP1250	PFP2291	-	PFP1051	PFP2315
0/15 psi/kPa	**PFP821**	PFP921	PFP601	PFP1001	PFP641	PFP1091	PFP2292	-	PFP656	PFP2316
0/30 psi/kPa	**PFP822**	**PFP922**	PFP602	PFP1002	**PFP642**	PFP1092	PFP2293	-	PFP657	PFP2317
0/60 psi/kPa	**PFP823**	**PFP923**	**PFP603**	PFP1003	**PFP643**	PFP1093	PFP2294	-	**PFP658**	PFP2318
0/100 psi/kPa	**PFP824**	**PFP924**	**PFP604**	PFP1004	**PFP644**	PFP1094	PFP2295	-	**PFP659**	PFP2319
0/160 psi/kPa	**PFP825**	**PFP925**	**PFP605**	PFP1005	**PFP645**	PFP1095	PFP2296	-	**PFP660**	PFP2320
0/200 psi/kPa	**PFP826**	**PFP926**	PFP606	PFP1006	**PFP646**	PFP1096	PFP2297	-	**PFP661**	PFP2321
0/300 psi/kPa	**PFP827**	**PFP927**	PFP607	PFP1007	**PFP647**	PFP1097	PFP2298	-	**PFP662**	PFP2322
0/400 psi/kPa	**PFP880**	PFP881	PFP610	PFP1016	PFP650	PFP1251	PFP2299	-	**PFP666**	PFP2323
0/600 psi/kPa	**PFP828**	**PFP928**	PFP608	PFP1008	**PFP648**	PFP1098	PFP2300	-	**PFP663**	PFP2324
0/1,000 psi/kPa	**PFP829**	**PFP929**	PFP609	-	PFP649	PFP1099	PFP624	PFP1009	**PFP664**	PFP2325
0/1,500 psi/kPa	PFP834	PFP934	-	-	PFP2301	PFP1252	PFP625	PFP1010	PFP665	PFP1190
0/2,000 psi/kPa	**PFP830**	PFP930	-	-	PFP2302	PFP1253	PFP626	PFP1011	PFP667	PFP1191
0/3,000 psi/kPa	**PFP831**	**PFP931**	-	-	PFP2303	PFP1254	PFP627	PFP1012	PFP668	PFP1192
0/5,000 psi/kPa	**PFP832**	**PFP852**	-	-	PFP2304	PFP1255	PFP628	PFP1013	PFP669	PFP1193
0/6,000 psi/kPa	PFP836	**PFP851**	-	-	PFP2305	PFP1259	PFP631	PFP1015	PFP675	PFP1197
0/10,000 psi/kPa	**PFP833**	PFP853	-	-	PFP2306	PFP1256	PFP629	PFP1014	PFP670	PFP1194
0/15,000 psi/kPa	PFP835	PFP855	-	-	PFP2307	PFP1257	PFP630	PFP1018	PFP671	PFP1195
0/20,000 psi/kPa	PFP837	-	-	-	-	PFP1258	PFP639	PFP1019	**PFP672**	PFP1196

Other ranges and connection sizes available upon request. 316 SS case and mountable bezel available upon request. For scale change, refer to How to Order Guide for scale codes. **For options, attach suffix to end of order code: i.e. PFP929-25UC for U-CLAMP.**

Option suffix:

25BF = 2.5" (63mm) Back flange
25BOOT = 2.5" (63mm) black rubber boot
25DRY = Supply 2.5" (63mm) gauge dry
25FF = 2.5" (63mm) Front flange
25SS = 2.5" (63mm) 316 SS case
25UC = 2.5" (63mm) U-Clamp
4BF = 4" (100mm) Back flange
4FF = 4" (100mm) Front flange
4SS = 4" (100mm) SS case
4UC-P = 4" (100mm) U-Clamp premium
DRY = Supply gauge dry
EN = EN837-1 compliant
MAXI25= 2.5" (63mm) Maxi pointer
MAXI4 = 4" (100mm) Maxi pointer
RSP4 = 4" (100mm) Red set pointer
SF25 = 2.5" (63mm) Silicone filled
SF4 = 4" (100mm) Silicone filled
SG-25 = 2.5" (63mm) Safety glass lens
SG-4 = 4" (100mm) Safety glass lens

For Win**BRIGHT** dial options refer to Custom Dials

4" Bottom Connection with Back Flange

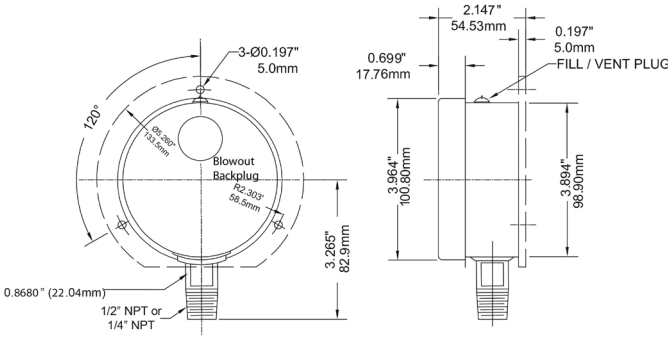

High Pressure Order Codes

Dial Size	4” (100mm)			
Connection	1/2” BSP(G) Bottom	1/2” BSP(G) Back (LB)	9/16” HP Bottom	1/4” HP Autoclave w/9/16” gland and collar Bottom
Movement, Socket, Tube	SS			
0/20,000 psi/kPa	-	-	PFP9601	PFP9621
0/25,000 psi/kPa	PFP9602T1	PFP9652T1	PFP9602	PFP9622
0/30,000 psi/kPa	PFP9603T1	PFP9653T1	PFP9603	PFP9623
0/35,000 psi/kPa	PFP9604T1	PFP9654T1	PFP9604	PFP9624
0/40,000 psi/kPa	PFP9605T1	PFP9655T1	PFP9605	PFP9625

Other ranges and connection sizes available upon request. 316 SS case and mountable bezel available upon request. For scale change, refer to How to Order Guide for scale codes. **For options, attach suffix to end of order code: i.e. PFP9652T1-4UC-P for U-CLAMP.**

Option suffix:

4BF = 4” (100mm) Back flange
4FF = 4” (100mm) Front flange
4SS = 4” (100mm) SS case
4UC-P = 4” (100mm) U-Clamp premium
DRY = Supply gauge dry
EN = EN837-1 compliant
RSP4 = 4” (100mm) Red set pointer
SF4 = 4” (100mm) Silicone filled
SG-4 = 4” (100mm) Safety glass lens

For Win**BRIGHT** dial options refer to Custom Dials

4” Bottom Connection 1/4” HP Autoclave w/9/16” Gland and Collar

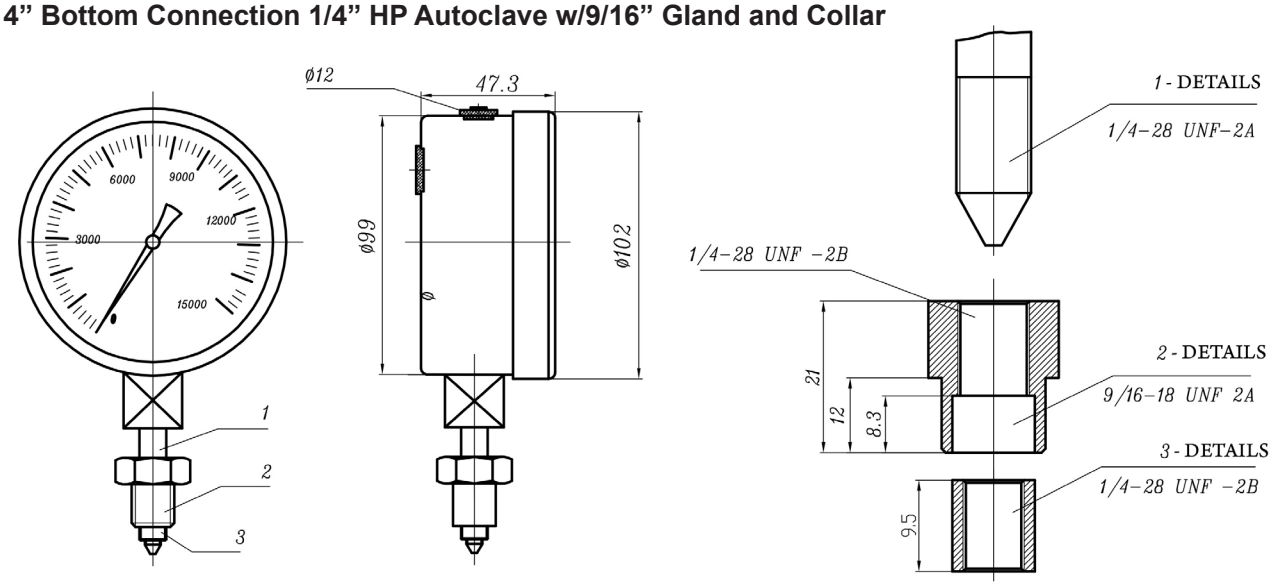

4” Back Connection HP 1/2” BSP(G)

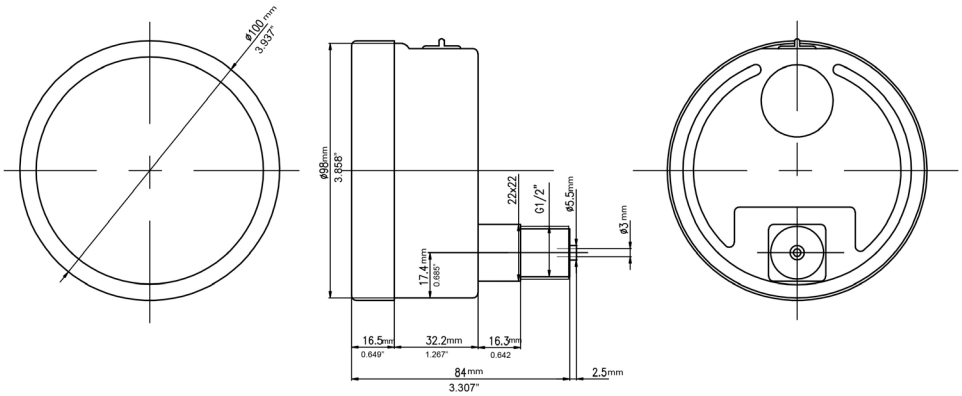

Dual Scale Order Codes

Dial Size	4.5” (115mm)							
Connection	1/4” Bottom	1/4” Back (LB)	1/2” Bottom	1/2” Back (LB)	1/4” Bottom	1/4” Back (LB)	1/2” Bottom	1/2” Back (LB)
Movement, Socket, Tube	Brass				SS			
30” Hg Vac/kPa	PFP500	PFP1300	PFP550	PFP1350	PFP700	PFP400	PFP750	PFP450
30”/0/15 psi/kPa	PFP501	PFP1301	PFP551	PFP1351	PFP701	PFP401	PFP751	PFP451
30”/0/30 psi/kPa	PFP502	PFP1302	PFP552	PFP1352	PFP702	PFP402	PFP752	PFP452
30”/0/60 psi/kPa	PFP503	PFP1303	PFP553	PFP1353	PFP703	PFP403	PFP753	PFP453
30”/0/100 psi/kPa	PFP504	PFP1304	PFP554	PFP1354	PFP704	PFP404	PFP754	PFP454
30”/0/150 psi/kPa	PFP505	PFP1305	PFP555	PFP1355	PFP705	PFP405	PFP755	PFP455
30”/0/200 psi/kPa	PFP506	PFP1306	PFP556	PFP1356	PFP706	PFP406	PFP756	PFP456
30”/0/300 psi/kPa	PFP507	PFP1307	PFP557	PFP1357	PFP707	PFP407	PFP757	PFP457
0/15 psi/kPa	PFP508	PFP1308	PFP558	PFP1358	PFP708	PFP408	PFP758	PFP458
0/30 psi/kPa	PFP509	PFP1309	PFP559	PFP1359	PFP709	PFP409	PFP759	PFP459
0/60 psi/kPa	PFP510	PFP1310	PFP560	PFP1360	PFP710	PFP410	PFP760	PFP460
0/100 psi/kPa	PFP511	PFP1311	PFP561	PFP1361	PFP711	PFP411	PFP761	PFP461
0/160 psi/kPa	PFP512	PFP1312	PFP562	PFP1362	PFP712	PFP412	PFP762	PFP462
0/200 psi/kPa	PFP513	PFP1313	PFP563	PFP1363	PFP713	PFP413	PFP763	PFP463
0/300 psi/kPa	PFP514	PFP1314	PFP564	PFP1364	PFP714	PFP414	PFP764	PFP464
0/400 psi/kPa	PFP515	PFP1315	PFP565	PFP1365	PFP715	PFP415	PFP765	PFP465
0/600 psi/kPa	PFP516	PFP1316	PFP566	PFP1366	PFP716	PFP416	PFP766	PFP466
0/1,000 psi/kPa	PFP517	PFP1317	PFP567	PFP1367	PFP717	PFP417	PFP767	PFP467
0/1,500 psi/kPa	PFP518	PFP1318	PFP568	PFP1368	PFP718	PFP418	PFP768	PFP468
0/2,000 psi/kPa	PFP519	PFP1319	PFP569	PFP1369	PFP719	PFP419	PFP769	PFP469
0/3,000 psi/kPa	PFP520	PFP1320	PFP570	PFP1370	PFP720	PFP420	PFP770	PFP470
0/5,000 psi/kPa	PFP521	PFP1321	PFP571	PFP1371	PFP721	PFP421	PFP771	PFP471
0/6,000 psi/kPa	PFP522	PFP1322	PFP572	PFP1372	PFP722	PFP422	PFP772	PFP472
0/10,000 psi/kPa	PFP523	PFP1323	PFP573	PFP1373	PFP723	PFP423	PFP773	PFP473
0/15,000 psi/kPa	PFP524	PFP1324	PFP574	PFP1374	PFP724	PFP424	PFP774	PFP474
0/20,000 psi/kPa	PFP525	PFP1325	PFP575	PFP1375	PFP725	PFP425	PFP775	PFP475

Other ranges and connection sizes available upon request. 316 SS case and mountable bezel available upon request. For scale change, refer to How to Order Guide for scale codes. **For options, attach suffix to end of order code: i.e. PFP1311-DRY for DRY GAUGE.**

Option suffix:

DRY = Supply gauge dry
EN = EN837-1 compliant
SF45 = 4.5” (115mm) Silicone filled
SG-45-P = 4.5” (115mm) Safety glass lens

4.5” Bottom Connection with Back Flange

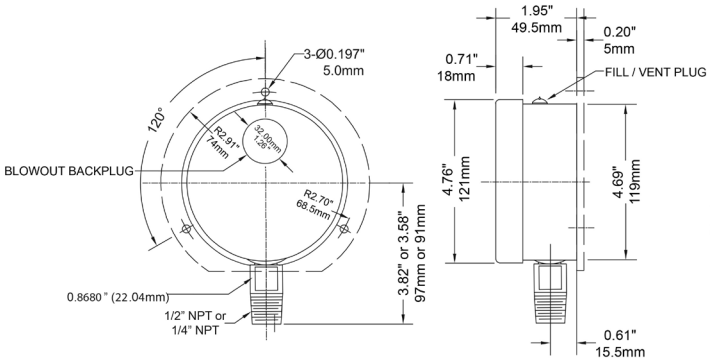

4.5” Back Connection with Front Flange

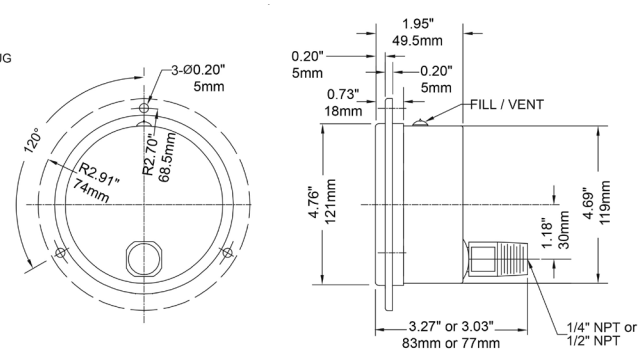

Dual Scale Order Codes

Dial Size	6” (150mm)			
Connection	1/4” Bottom	1/4” Back (LB)	1/2” Bottom	1/2” Back (LB)
Movement, Socket, Tube	SS			
30” Hg Vac/kPa	PFP1078	PFP1168	PFP2326	-
30”/0/15 psi/kPa	PFP1079	-	PFP2327	-
30”/0/30 psi/kPa	PFP1052	-	PFP2328	-
30”/0/60 psi/kPa	PFP1053	-	PFP2329	-
30”/0/100 psi/kPa	PFP1054	-	PFP2330	-
30”/0/150 psi/kPa	PFP1055	-	PFP2331	-
30”/0/200 psi/kPa	PFP1057	-	PFP2332	-
30”/0/300 psi/kPa	PFP1058	-	PFP2333	-
0/15 psi/kPa	PFP1059	PFP1159	PFP2334	-
0/30 psi/kPa	PFP1060	PFP1160	PFP2335	-
0/60 psi/kPa	PFP1061	PFP1161	PFP2336	-
0/100 psi/kPa	PFP1062	PFP1162	PFP2337	-
0/160 psi/kPa	PFP1063	PFP1163	PFP2338	-
0/200 psi/kPa	PFP1064	PFP1164	PFP2339	-
0/300 psi/kPa	PFP1065	PFP1165	PFP2340	-
0/400 psi/kPa	PFP1077	-	PFP2341	-
0/600 psi/kPa	PFP1066	PFP1166	PFP2342	-
0/1,000 psi/kPa	PFP1067	PFP1167	PFP1080	-
0/1,500 psi/kPa	PFP1068	-	PFP1081	PFP1169
0/2,000 psi/kPa	PFP1069	-	PFP1082	PFP1170
0/3,000 psi/kPa	PFP1070	-	PFP1083	PFP1171
0/4,000 psi/kPa	PFP1071	-	PFP1084	-
0/5,000 psi/kPa	PFP1072	-	PFP1085	PFP1172
0/6,000 psi/kPa	PFP1289	-	PFP1089	PFP1176
0/10,000 psi/kPa	PFP1073	-	PFP1086	PFP1173
0/15,000 psi/kPa	PFP1074	-	PFP1087	PFP1174
0/20,000 psi/kPa	PFP1075	-	PFP1088	PFP1175

Other ranges and connection sizes available upon request. For scale change, refer to How to Order Guide for scale codes. **For options, attach suffix to end of order code:**
i.e. PFP1064-SC for SAFETY CASE

Option suffix:

6BF = 6” (150mm) Back flange
6FF = 6” (150mm) Front flange
6SS = 6” (150mm) SS case
6UC = 6” (150mm) U-Clamp
DRY = Supply gauge dry
EN = EN837-1 compliant
RSP6 = 6” (150mm) Red set pointer
SC = 6” (150mm) Safety case
SF6 = 6” (150mm) Silicone fill
SG-6 = 6” (150mm) Safety glass lens

For Win**BRIGHT** dial options refer to Custom Dials

6” Bottom Connection

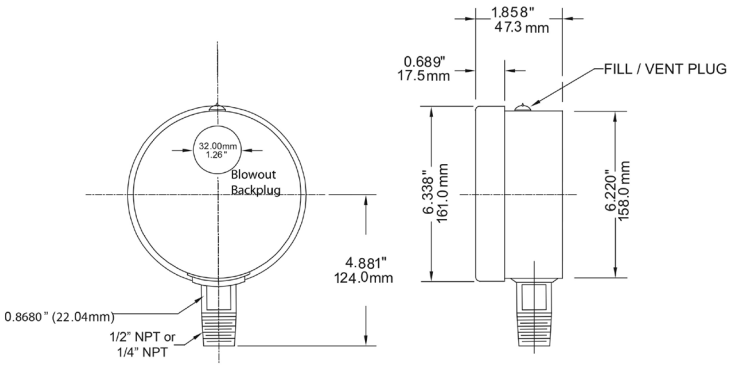

6” Back Connection with Front Flange

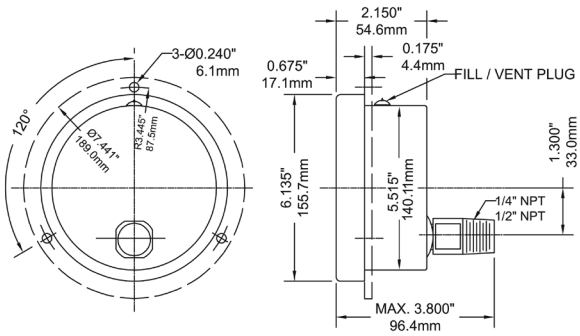

Premium Stainless Steel Liquid Filled Gauge for Panel Mounting

PFP

Description & Features:

- Liquid filled stainless steel case protects against extreme vibration and pulsation
- Lower back mount with front flange for panel mounting
- Bayonet ring
- Dual and single scale available (psi/kPa & psi only)
- Stainless steel wetted parts
- Restricted orifice standard on dual scale (optional on single scale)
- Safety glass
- ASME B40.100 compliant (EN837-1 available)
- CRN registered
- 5 year warranty

Applications:

- Outdoor and severe ambient and process conditions
- Use where harmful vibration and pulsation are present
- Panel builders in hydraulic equipment, oil field equipment, pumps, compressors and process industries

Specifications	
Dial	2.5” (63mm) white aluminum with black and red markings
Case	AISI 304 SS
Lens	Safety glass
Ring	AISI 304 SS
Socket	316L SS welded one-piece socket
Connection	1/4” NPT
Bourdon Tube	316L SS, drawn seamless
Movement	304 SS
Pointer	Aluminum, anodized black
Welding	Laser welded socket to case
Fill Liquid	Glycerin
Over-pressure Limit	25% for pressures up to 1,450 psi (9,998 kPa), 15% for pressures over 1,450 psi (9,998 kPa)
Fill Plug	Buna N (silicone rubber option)
Lens Ring Gasket	Buna N (silicone rubber option)
Working Pressure	Maximum 75% of full scale value
Ambient Temperature	Dry: -40°F to 250°F (-40°C to 120°C) Glycerin Filled: -4°F to 150°F (-20°C to 65°C)
Process Temperature	-40°F to 250°F (-40°C to 120°C)
Accuracy	±1.5% of full scale value
Enclosure Rating	NEMA 4X/IP66, EN60529-1 (IEC529-1)

Premium Stainless Steel Liquid Filled Gauge for Panel Mounting

Single Scale Order Codes (products in bold are normally stock in North America)

Dial Size	2.5” (63mm)
Connection	1/4” Back (LBM)
Movement, Socket, Tube	SS
30” Hg Vac	PFP3772R1
30”/0/15 psi	PFP3773R1
30”/0/30 psi	PFP3774R1
30”/0/60 psi	PFP3775R1
30”/0/100 psi	PFP3776R1
30”/0/150 psi	PFP3777R1
30”/0/200 psi	PFP3778R1
30”/0/300 psi	PFP3779R1
0/15 psi	PFP3780R1
0/30 psi	PFP3781R1
0/60 psi	PFP3782R1
0/100 psi	**PFP3783R1**
0/160 psi	PFP3784R1
0/200 psi	PFP3785R1
0/300 psi	PFP3786R1
0/400 psi	PFP3787R1
0/600 psi	PFP3788R1
0/1,000 psi	PFP3789R1
0/1,500 psi	PFP3790R1
0/2,000 psi	PFP3791R1
0/3,000 psi	PFP3792R1
0/5,000 psi	PFP3793R1
0/6,000 psi	PFP3794R1
0/7,500 psi	PFP3795R1
0/10,000 psi	PFP3796R1
0/15,000 psi	PFP3797R1
0/20,000 psi	PFP3798R1

Dual Scale Order Codes

Dial Size	2.5” (63mm)
Connection	1/4” Back (LBM)
Movement, Socket, Tube	SS
30” Hg Vac/kPa	PFP3772
30”/0/15 psi/kPa	PFP3773
30”/0/30 psi/kPa	PFP3774
30”/0/60 psi/kPa	PFP3775
30”/0/100 psi/kPa	PFP3776
30”/0/150 psi/kPa	PFP3777
30”/0/200 psi/kPa	PFP3778
30”/0/300 psi/kPa	PFP3779
0/15 psi/kPa	PFP3780
0/30 psi/kPa	PFP3781
0/60 psi/kPa	PFP3782
0/100 psi/kPa	PFP3783
0/160 psi/kPa	PFP3784
0/200 psi/kPa	PFP3785
0/300 psi/kPa	PFP3786
0/400 psi/kPa	PFP3787
0/600 psi/kPa	PFP3788
0/1,000 psi/kPa	PFP3789
0/1,500 psi/kPa	PFP3790
0/2,000 psi/kPa	PFP3791
0/3,000 psi/kPa	PFP3792
0/5,000 psi/kPa	PFP3793
0/6,000 psi/kPa	PFP3794
0/7,500 psi/kPa	PFP3795
0/10,000 psi/kPa	PFP3796
0/15,000 psi/kPa	PFP3797
0/20,000 psi/kPa	PFP3798

Other ranges and connection sizes available upon request. For scale change, refer to How to Order Guide for scale codes.

Option suffix:

25DRY = Supply 2.5” (63mm) gauge dry
25SS = 2.5” (63mm) 316 SS case
MAXI25 = 2.5” (63mm) Maxi Pointer
EN = EN837-1 compliant
REST = Restrictor screw (psi only)
SF25 = 2.5” (63mm) Silicone filled

2.5” Lower Back Connection with Front Flange

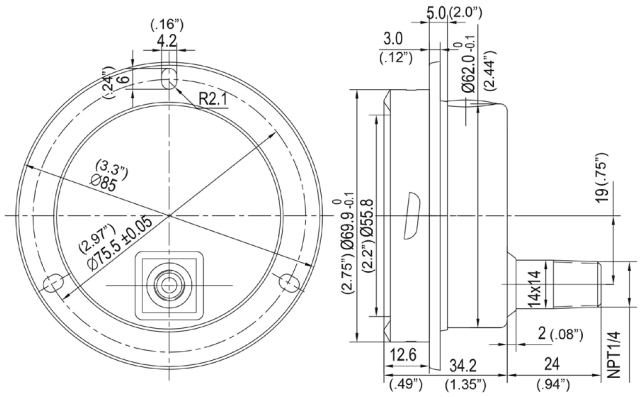

Dimensions in mm (inches)

Stainless Steel Liquid Filled Gauge, Lead Free Stainless Steel Liquid Filled Gauge

PFQ, PFQ-LF

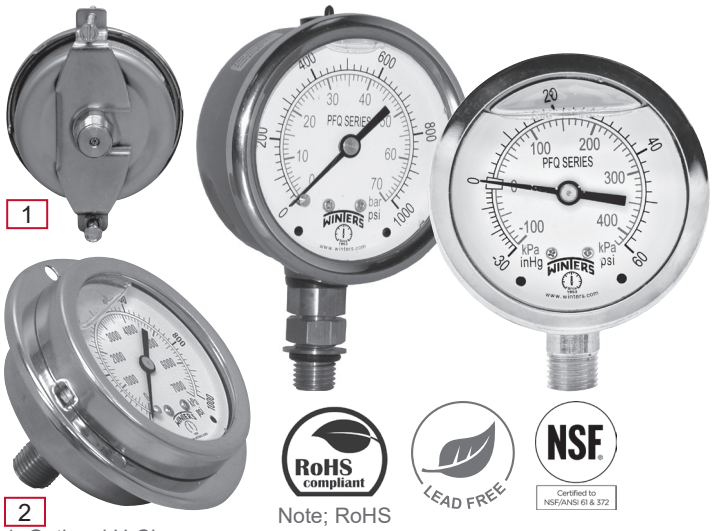

1. Optional U-Clamp
2. Optional Front Flange

Note; RoHS applies SS internals only

Description & Features:

- Pulsation resistant, liquid filled stainless steel case
- Glycerin filled standard
- Brass or stainless steel internals
- Restricted orifice standard on dual scale
- Ventable plug on 2.5" (63mm) and 4" (100mm) bottom mount (excluding SAE connection)
- Crimp-On bezel
- Single (psi) or dual scale (psi/kPa)/(psi/bar) available
- Optional U-Clamps and front flanges
- Dry case available
- ASME B40.100 compliant (EN837-1 available on 2" (50mm) dial and up)
- CRN registered
- Lead free version NSF-61-372 certified
- 5 year warranty

Applications:

- Ideal for pumps, compressors, hydraulic presses, machinery, pneumatic equipment and motors in harsh environments
- Use where harmful vibration and pulsation are present

Specifications	Stainless Steel Internals	Brass/Lead Free Brass Internals
Dial	1.5" (40mm), 2" (50mm), 2.5" (63mm), 4" (100mm), white aluminum with black and red markings	1.5" (40mm), 2" (50mm), 2.5" (63mm), 4" (100mm), white aluminum with black and red markings
Case	AISI 304 SS	AISI 304 SS
Lens	Polycarbonate	Polycarbonate
Ring	AISI 304 SS, Crimp-On	AISI 304 SS, Crimp-On
Socket	AISI 316 SS with restrictor screw (dual scale only)	OT 58 brass with restricted orifice (dual scale only) or lead free brass with restricted orifice (dual scale only), NSF-61-372 certified
Connection	1/8", 1/4" or 1/2" NPT	1/8", 1/4" or 1/2" NPT or 7/16-20 SAE standard with restricted orifice
Fill Liquid	Glycerin	Glycerin
Bourdon Tube	1.5" (40mm), 2" (50mm): SS C or coil shaped 2.5" (63mm), 4" (100mm): AISI 316 SS C or coil shaped	Phosphor bronze C or coil shaped
Movement	SS	PFQ: OT 59 brass PFQ-LF (1.5", 2", 2.5"): SS, PFQ-LF (4"): Lead free brass, NSF-61-372 certified
Pointer	Aluminum, anodized black	Aluminum, anodized black
Welding	TIG	Silver alloy
Over-pressure Limit	25% for pressures up to 1,450 psi (9,998 kPa), 15% for pressures over 1,450 psi (9,998 kPa)	25% for pressures up to 1,450 psi (9,998 kPa), 15% for pressures over 1,450 psi (9,998 kPa)
Socket Gasket	Buna N for two-piece internal socket seal	Buna N for two-piece internal socket seal
Fill Plug	Buna N	Buna N
Lens Ring Gasket	Silicone rubber	Silicone rubber
Working Pressure	Maximum 75% of full scale value	Maximum 75% of full scale value
Ambient/Process Temperature	Dry: -40°F to 200°F (-40°C to 93°C) Glycerin Filled: -4°F to 150°F (-20°C to 65°C)	Dry: -40°F to 200°F (-40°C to 93°C) Glycerin Filled: -4°F to 150°F (-20°C to 65°C)
Accuracy	1.5" (40mm), 2" (50mm): ±2.5% of full scale value 2.5" (63mm), 4" (100mm): ±1.5% of full scale value	1.5" (40mm), 2" (50mm): ±2.5% of full scale value 2.5" (63mm), 4" (100mm): ±1.5% of full scale value
Enclosure Rating	IP65	IP65
Warning (brass and lead free brass internals only)	N/A	**WARNING:** This product can expose you to chemicals including lead, which is known to the State of California to cause cancer and birth defects or other reproductive harm. For more information go to www.P65Warnings.ca.gov.

Dual Scale Order Codes (products in bold are normally stock in North America)

Dial Size	1.5" (40mm)			
Connection	1/8" Bottom	1/8" Back (CB)	1/8" Bottom	1/8" Back (CB)
Movement, Socket, Tube	Brass		SS	
30" Hg Vac/kPa	-	-	PFQ1200	PFQ1220
0/15 psi/kPa	-	-	PFQ1201	PFQ1221
0/30 psi/kPa	PFQ1102	**PFQ1122**	PFQ1202	**PFQ1222**
0/60 psi/kPa	**PFQ1103**	**PFQ1123**	PFQ1203	PFQ1223
0/100 psi/kPa	**PFQ1104**	**PFQ1124**	PFQ1204	**PFQ1224**
0/160 psi/kPa	PFQ1105	**PFQ1125**	PFQ1205	**PFQ1225**
0/200 psi/kPa	PFQ1106	PFQ1126	PFQ1206	PFQ1226
0/300 psi/kPa	PFQ1107	**PFQ1127**	PFQ1207	PFQ1227
0/600 psi/kPa	PFQ1108	PFQ1128	PFQ1208	PFQ1228
0/1,000 psi/kPa	PFQ1109	**PFQ1129**	PFQ1209	PFQ1229
0/1,500 psi/kPa	PFQ1110	**PFQ1130**	PFQ1210	PFQ1230
0/2,000 psi/kPa	PFQ1111	PFQ1131	PFQ1211	PFQ1231
0/3,000 psi/kPa	PFQ1112	PFQ1132	PFQ1212	PFQ1232
0/5,000 psi/kPa	PFQ1113	**PFQ1133**	PFQ1213	PFQ1233

PFQ-LF Order Codes

Dial Size	1.5" (40mm)	
Connection	1/8" Bottom	1/8" Back (CB)
Movement, Socket, Tube	Lead Free Brass	
0/30 psi/kPa	PFQ1102LF	PFQ1122LF
0/60 psi/kPa	PFQ1103LF	PFQ1123LF
0/100 psi/kPa	PFQ1104LF	PFQ1124LF
0/160 psi/kPa	PFQ1105LF	PFQ1125LF
0/200 psi/kPa	PFQ1106LF	PFQ1126LF
0/300 psi/kPa	PFQ1107LF	PFQ1127LF
0/600 psi/kPa	PFQ1108LF	PFQ1128LF
0/1,000 psi/kPa	PFQ1109LF	PFQ1129LF
0/1,500 psi/kPa	PFQ1110LF	PFQ1130LF
0/2,000 psi/kPa	PFQ1111LF	PFQ1131LF
0/3,000 psi/kPa	PFQ1112LF	PFQ1132LF
0/5,000 psi/kPa	PFQ1113LF	PFQ1133LF

Other ranges and connection sizes available upon request. For scale change, refer to How to Order Guide for scale codes. 1.5" (40mm) gauges are available dry (non-liquid filled) only on a special order basis. **For options, attach suffix to end of order code: i.e. PFQ1102-15DRY for DRY CASE**

Option suffix:
15DRY = Supply 1.5" (40mm) gauge dry
15FF = 1.5" (40mm) Front flange
15UC = 1.5" (40mm) U-Clamp

Single Scale Order Codes

Dial Size	2” (50mm)							
Connection	1/8” Bottom	1/8” Back (CB)	1/8” Bottom	1/8” Back (CB)	1/4” Bottom	1/4” Back (CB)	1/4” Bottom	1/4” Back (CB)
Movement, Socket, Tube	Brass		SS		Brass		SS	
30” Hg Vac	PFQ2400R1	PFQ2426R1	PFQ2248R1	PFQ2309R1	PFQ2452R1	PFQ2478R1	PFQ2247R1	PFQ2246R1
30”/0/15 psi	PFQ2401R1	PFQ2427R1	PFQ2295R1	PFQ2310R1	PFQ2453R1	PFQ2479R1	PFQ2271R1	PFQ2282R1
30”/0/30 psi	PFQ2402R1	PFQ2428R1	PFQ2241R1	PFQ2311R1	PFQ2454R1	PFQ2480R1	PFQ2272R1	PFQ2283R1
30”/0/60 psi	PFQ2403R1	PFQ2429R1	PFQ2296R1	PFQ2312R1	PFQ2455R1	PFQ2481R1	PFQ2273R1	PFQ2242R1
30”/0/100 psi	PFQ2404R1	PFQ2430R1	PFQ2297R1	PFQ2313R1	PFQ2456R1	PFQ2482R1	PFQ2274R1	PFQ2284R1
30”/0/160 psi	PFQ2405R1	PFQ2431R1	PFQ2298R1	PFQ2314R1	PFQ2457R1	PFQ2483R1	PFQ2275R1	PFQ2285R1
30”/0/200 psi	PFQ2406R1	PFQ2432R1	PFQ2299R1	PFQ2315R1	PFQ2458R1	PFQ2484R1	PFQ2276R1	PFQ2286R1
30”/0/300 psi	PFQ2407R1	PFQ2433R1	PFQ2300R1	PFQ2316R1	PFQ2459R1	PFQ2485R1	PFQ2277R1	PFQ2287R1
0/15 psi	PFQ2408R1	PFQ2434R1	PFQ2218R1	PFQ2217R1	PFQ2460R1	PFQ2486R1	PFQ2215R1	PFQ2214R1
0/30 psi	PFQ2409R1	PFQ2435R1	PFQ2253R1	PFQ2252R1	PFQ2461R1	PFQ2487R1	PFQ2250R1	PFQ2249R1
0/60 psi	PFQ2410R1	PFQ2436R1	PFQ2270R1	PFQ2269R1	PFQ2462R1	PFQ2488R1	PFQ2266R1	PFQ2265R1
0/100 psi	PFQ2411R1	PFQ2437R1	PFQ2209R1	PFQ2208R1	PFQ2463R1	PFQ2489R1	PFQ2205R1	PFQ2204R1
0/160 psi	PFQ2412R1	PFQ2438R1	PFQ2206R1	PFQ2207R1	PFQ2464R1	PFQ2490R1	PFQ2220R1	PFQ2219R1
0/200 psi	PFQ2413R1	PFQ2439R1	PFQ2301R1	PFQ2951R1	PFQ2465R1	PFQ2491R1	PFQ2267R1	PFQ2268R1
0/300 psi	PFQ2414R1	PFQ2440R1	PFQ2245R1	PFQ2318R1	PFQ2466R1	PFQ2492R1	PFQ2244R1	PFQ2243R1
0/400 psi	PFQ2415R1	PFQ2441R1	PFQ2302R1	PFQ2319R1	PFQ2467R1	PFQ2493R1	PFQ2254R1	PFQ2288R1
0/600 psi	PFQ2416R1	PFQ2442R1	PFQ2264R1	PFQ2320R1	PFQ2468R1	PFQ2494R1	PFQ2278R1	PFQ2289R1
0/1,000 psi	PFQ2417R1	PFQ2443R1	PFQ2203R1	PFQ2321R1	PFQ2469R1	PFQ2495R1	PFQ2202R1	PFQ2201R1
0/1,500 psi	PFQ2418R1	PFQ2444R1	PFQ2213R1	PFQ2322R1	PFQ2470R1	PFQ2496R1	PFQ2212R1	PFQ2211R1
0/2,000 psi	PFQ2419R1	PFQ2445R1	PFQ2304R1	PFQ2323R1	PFQ2471R1	PFQ2497R1	PFQ2279R1	PFQ2290R1
0/3,000 psi	PFQ2420R1	PFQ2446R1	PFQ2305R1	PFQ2324R1	PFQ2472R1	PFQ2498R1	PFQ2280R1	PFQ2291R1
0/5,000 psi	PFQ2421R1	PFQ2447R1	PFQ2258R1	PFQ2257R1	PFQ2473R1	PFQ2499R1	PFQ2256R1	PFQ2255R1
0/6,000 psi	PFQ2422R1	PFQ2448R1	PFQ2262R1	PFQ2261R1	PFQ2474R1	PFQ2500R1	PFQ2260R1	PFQ2259R1
0/7,500 psi	PFQ2423R1	PFQ2449R1	PFQ2306R1	PFQ2325R1	PFQ2475R1	PFQ2501R1	PFQ2281R1	PFQ2292R1
0/10,000 psi	PFQ2424R1	PFQ2450R1	PFQ2307R1	PFQ2326R1	PFQ2476R1	PFQ2502R1	PFQ2200R1	PFQ2293R1
0/15,000 psi	PFQ2425R1	PFQ2451R1	PFQ2308R1	PFQ2327R1	PFQ2477R1	PFQ2503R1	PFQ2210R1	PFQ2294R1

Other ranges and connection sizes available upon request. For scale change, refer to How to Order Guide for scale codes. Front flange for 2” (50mm) gauge is available. **For options, attach suffix to end of order code: i.e. PFQ2414R1-20DRY for DRY CASE**

Option suffix:
20DRY = Supply 2” (50mm) gauge dry
2UC = 2” (50mm) U-Clamp
EN = EN837-1 compliant
REST = Restrictor screw

Stainless Steel Liquid Filled Gauge, Lead Free Stainless Steel Liquid Filled Gauge

Single Scale Order Codes (products in bold are normally stock in North America)

Dial Size	2.5" (63mm)			
Connection	1/4" Bottom	1/4" Back (CB)	1/4" Bottom	1/4" Back (CB)
Movement, Socket, Tube	Brass		SS	
30" Hg Vac	**PFQ801R1**	PFQ900R1	PFQ106R1	PFQ147R1
30"/0/15 psi	PFQ790R1	PFQ890R1	PFQ107R1	PFQ148R1
30"/0/30 psi	**PFQ798R1**	PFQ898R1	PFQ108R1	PFQ149R1
30"/0/60 psi	PFQ799R1	PFQ899R1	PFQ109R1	PFQ151R1
30"/0/100 psi	PFQ791R1	PFQ891R1	PFQ110R1	PFQ156R1
30"/0/160 psi	PFQ792R1	PFQ892R1	PFQ111R1	PFQ157R1
30"/0/200 psi	PFQ794R1	PFQ894R1	PFQ112R1	PFQ158R1
30"/0/300 psi	PFQ795R1	PFQ895R1	PFQ113R1	PFQ159R1
0/15 psi	**PFQ800R1**	PFQ901R1	PFQ118R1	PFQ162R1
0/30 psi	**PFQ802R1**	**PFQ902R1**	PFQ119R1	PFQ163R1
0/60 psi	**PFQ803R1**	PFQ903R1	**PFQ120R1**	PFQ164R1
0/100 psi	**PFQ804R1**	**PFQ904R1**	**PFQ121R1**	PFQ169R1
0/160 psi	**PFQ805R1**	PFQ905R1	PFQ122R1	PFQ170R1
0/200 psi	**PFQ806R1**	**PFQ906R1**	PFQ123R1	PFQ171R1
0/300 psi	**PFQ807R1**	PFQ907R1	PFQ124R1	PFQ175R1
0/400 psi	**PFQ817R1**	PFQ917R1	PFQ125R1	PFQ177R1
0/600 psi	**PFQ808R1**	PFQ908R1	PFQ126R1	PFQ178R1
0/1,000 psi	**PFQ809R1**	PFQ909R1	PFQ127R1	PFQ179R1
0/1,500 psi	PFQ816R1	PFQ914R1	PFQ128R1	PFQ180R1
0/2,000 psi	PFQ810R1	PFQ910R1	PFQ129R1	PFQ181R1
0/3,000 psi	**PFQ811R1**	PFQ911R1	PFQ137R1	PFQ182R1
0/4,000 psi	PFQ819R1	PFQ919R1	-	-
0/5,000 psi	**PFQ812R1**	PFQ912R1	PFQ138R1	PFQ183R1
0/6,000 psi	**PFQ814R1**	PFQ915R1	PFQ139R1	PFQ184R1
0/7,500 psi	PFQ818R1	PFQ918R1	PFQ144R1	PFQ186R1
0/10,000 psi	**PFQ813R1**	PFQ913R1	PFQ145R1	PFQ190R1
0/15,000 psi	-	-	PFQ146R1	PFQ191R1

Other ranges and connection sizes available upon request. For scale change, refer to How to Order Guide for scale codes. Front flange for 2" (50mm) gauge is available. **For options, attach suffix to end of order code: i.e. PFQ806R1-25DRY for DRY CASE**

Option suffix:

25BF = 2.5" (63mm) Back flange
25DRY = Supply 2.5" (63mm) gauge dry
25FF = 2.5" (63mm) Front flange
25UC = 2.5" (63mm) U-Clamp
EN = EN837-1 compliant
REST = Restrictor screw
SF25 = 2.5" (63mm) Silicone filled

Dual Scale Order Codes (products in bold are normally stock in North America)

Dial Size	2" (50mm)							
Connection	1/8" Bottom	1/8" Back (CB)	1/8" Bottom	1/8" Back (CB)	1/4" Bottom	1/4" Back (CB)	1/4" Bottom	1/4" Back (CB)
Movement, Socket, Tube	Brass		SS		Brass		SS	
30" Hg Vac/kPa	PFQ2400	PFQ2426	PFQ2248	PFQ2309	PFQ2452	PFQ2478	PFQ2247	PFQ2246
30"/0/15 psi/kPa	PFQ2401	PFQ2427	PFQ2295	PFQ2310	PFQ2453	PFQ2479	PFQ2271	PFQ2282
30"/0/30 psi/kPa	PFQ2402	PFQ2428	PFQ2241	PFQ2311	PFQ2454	PFQ2480	PFQ2272	PFQ2283
30"/0/60 psi/kPa	PFQ2403	PFQ2429	PFQ2296	PFQ2312	PFQ2455	PFQ2481	PFQ2273	PFQ2242
30"/0/100 psi/kPa	PFQ2404	PFQ2430	PFQ2297	PFQ2313	PFQ2456	PFQ2482	PFQ2274	PFQ2284
30"/0/150 psi/kPa	PFQ2405	PFQ2431	PFQ2298	PFQ2314	PFQ2457	PFQ2483	PFQ2275	PFQ2285
30"/0/200 psi/kPa	PFQ2406	PFQ2432	PFQ2299	PFQ2315	PFQ2458	PFQ2484	PFQ2276	PFQ2286
30"/0/300 psi/kPa	PFQ2407	PFQ2433	PFQ2300	PFQ2316	PFQ2459	PFQ2485	PFQ2277	PFQ2287
0/15 psi/kPa	PFQ2408	PFQ2434	PFQ2218	PFQ2217	PFQ2460	PFQ2486	PFQ2215	PFQ2214
0/30 psi/kPa	PFQ2409	PFQ2435	PFQ2253	PFQ2252	**PFQ2461**	**PFQ2487**	PFQ2250	PFQ2249
0/60 psi/kPa	PFQ2410	PFQ2436	PFQ2270	PFQ2269	**PFQ2462**	PFQ2488	PFQ2266	PFQ2265
0/100 psi/kPa	PFQ2411	PFQ2437	PFQ2209	PFQ2208	**PFQ2463**	PFQ2489	PFQ2205	PFQ2204
0/160 psi/kPa	PFQ2412	**PFQ2438**	PFQ2206	PFQ2207	**PFQ2464**	**PFQ2490**	PFQ2220	PFQ2219
0/200 psi/kPa	PFQ2413	PFQ2439	PFQ2301	PFQ2951	PFQ2465	PFQ2491	PFQ2267	PFQ2268
0/300 psi/kPa	PFQ2414	PFQ2440	PFQ2245	PFQ2318	PFQ2466	PFQ2492	PFQ2244	PFQ2243
0/400 psi/kPa	PFQ2415	PFQ2441	PFQ2302	PFQ2319	PFQ2467	PFQ2493	PFQ2254	PFQ2288
0/600 psi/kPa	**PFQ2416**	PFQ2442	PFQ2264	PFQ2320	PFQ2468	PFQ2494	PFQ2278	PFQ2289
0/1,000 psi/kPa	PFQ2417	PFQ2443	PFQ2203	PFQ2321	PFQ2469	**PFQ2495**	PFQ2202	PFQ2201
0/1,500 psi/kPa	PFQ2418	PFQ2444	PFQ2213	PFQ2322	PFQ2470	PFQ2496	PFQ2212	PFQ2211
0/2,000 psi/kPa	PFQ2419	PFQ2445	PFQ2304	PFQ2323	PFQ2471	PFQ2497	PFQ2279	PFQ2290
0/3,000 psi/kPa	PFQ2420	PFQ2446	PFQ2305	PFQ2324	PFQ2472	PFQ2498	PFQ2280	PFQ2291
0/5,000 psi/kPa	PFQ2421	PFQ2447	PFQ2258	PFQ2257	PFQ2473	PFQ2499	PFQ2256	PFQ2255
0/6,000 psi/kPa	PFQ2422	PFQ2448	PFQ2262	PFQ2261	PFQ2474	PFQ2500	PFQ2260	PFQ2259
0/7,500 psi/kPa	PFQ2423	PFQ2449	PFQ2306	PFQ2325	PFQ2475	PFQ2501	PFQ2281	PFQ2292
0/10,000 psi/kPa	PFQ2424	PFQ2450	PFQ2307	PFQ2326	PFQ2476	PFQ2502	PFQ2200	PFQ2293
0/15,000 psi/kPa	PFQ2425	PFQ2451	PFQ2308	PFQ2327	PFQ2477	PFQ2503	PFQ2210	PFQ2294

PFQ-LF Order Codes

Dial Size	2" (50mm)			
Connection	1/8" Bottom	1/8" Back (CB)	1/4" Bottom	1/4" Back (CB)
Movement, Socket, Tube	Lead Free Brass			
30" Hg Vac/kPa	PFQ2400LF	PFQ2426LF	PFQ2452LF	PFQ2478LF
30"/0/15 psi/kPa	PFQ2401LF	PFQ2427LF	PFQ2453LF	PFQ2479LF
30"/0/30 psi/kPa	PFQ2402LF	PFQ2428LF	PFQ2454LF	PFQ2480LF
30"/0/60 psi/kPa	PFQ2403LF	PFQ2429LF	PFQ2455LF	PFQ2481LF
30"/0/100 psi/kPa	PFQ2404LF	PFQ2430LF	PFQ2456LF	PFQ2482LF
30"/0/160 psi/kPa	PFQ2405LF	PFQ2431LF	PFQ2457LF	PFQ2483LF
30"/0/200 psi/kPa	PFQ2406LF	PFQ2432LF	PFQ2458LF	PFQ2484LF
30"/0/300 psi/kPa	PFQ2407LF	PFQ2433LF	PFQ2459LF	PFQ2485LF
0/15 psi/kPa	PFQ2408LF	PFQ2434LF	PFQ2460LF	PFQ2486LF
0/30 psi/kPa	PFQ2409LF	PFQ2435LF	PFQ2461LF	PFQ2487LF
0/60 psi/kPa	PFQ2410LF	PFQ2436LF	PFQ2462LF	PFQ2488LF
0/100 psi/kPa	PFQ2411LF	PFQ2437LF	PFQ2463LF	PFQ2489LF
0/160 psi/kPa	PFQ2412LF	PFQ2438LF	PFQ2464LF	PFQ2490LF
0/200 psi/kPa	PFQ2413LF	PFQ2439LF	PFQ2465LF	PFQ2491LF
0/300 psi/kPa	PFQ2414LF	PFQ2440LF	PFQ2466LF	PFQ2492LF
0/400 psi/kPa	PFQ2415LF	PFQ2441LF	PFQ2467LF	PFQ2493LF
0/600 psi/kPa	PFQ2416LF	PFQ2442LF	PFQ2468LF	PFQ2494LF
0/1,000 psi/kPa	PFQ2417LF	PFQ2443LF	PFQ2469LF	PFQ2495LF
0/1,500 psi/kPa	PFQ2418LF	PFQ2444LF	PFQ2470LF	PFQ2496LF
0/2,000 psi/kPa	PFQ2419LF	PFQ2445LF	PFQ2471LF	PFQ2497LF
0/3,000 psi/kPa	PFQ2420LF	PFQ2446LF	PFQ2472LF	PFQ2498LF
0/5,000 psi/kPa	PFQ2421LF	PFQ2447LF	PFQ2473LF	PFQ2499LF
0/6,000 psi/kPa	PFQ2422LF	PFQ2448LF	PFQ2474LF	PFQ2500LF
0/7,500 psi/kPa	PFQ2423LF	PFQ2449LF	PFQ2475LF	PFQ2501LF
0/10,000 psi/kPa	PFQ2424LF	PFQ2450LF	PFQ2476LF	PFQ2502LF
0/15,000 psi/kPa	PFQ2425LF	PFQ2451LF	PFQ2477LF	PFQ2503LF

Other ranges and connection sizes available upon request. For scale change, refer to How to Order Guide for scale codes. Front flange for 2" (50mm) gauge is available. **For options, attach suffix to end of order code: i.e. PFQ2218R1-20DRY for DRY CASE**

Option suffix:
2FF = 2" (50mm) Front flange
2UC = 2" (50mm) U-Clamp
20DRY = Supply 2" gauge dry
EN = EN837-1 compliant

Dual Scale Order Codes (products in bold are normally stock in North America)

Dial Size	2.5" (63mm)			
Connection	1/4" Bottom	1/4" Back (CB)	1/4" Bottom	1/4" Back (CB)
Movement, Socket, Tube	Brass		SS	
30" Hg Vac/kPa	**PFQ801**	**PFQ900**	**PFQ106**	PFQ147
30"/0/15 psi/kPa	**PFQ790**	PFQ890	PFQ107	PFQ148
30"/0/30 psi/kPa	**PFQ798**	**PFQ898**	**PFQ108**	PFQ149
30"/0/60 psi/kPa	**PFQ799**	**PFQ899**	**PFQ109**	PFQ151
30"/0/100 psi/kPa	**PFQ791**	PFQ891	PFQ110	PFQ156
30"/0/150 psi/kPa	**PFQ792**	**PFQ892**	PFQ111	PFQ157
30"/0/200 psi/kPa	**PFQ794**	**PFQ894**	PFQ112	PFQ158
30"/0/300 psi/kPa	**PFQ795**	PFQ895	PFQ113	PFQ159
0/15 psi/kPa	**PFQ800**	**PFQ901**	**PFQ118**	PFQ162
0/30 psi/kPa	**PFQ802**	**PFQ902**	**PFQ119**	**PFQ163**
0/60 psi/kPa	**PFQ803**	**PFQ903**	**PFQ120**	**PFQ164**
0/100 psi/kPa	**PFQ804**	**PFQ904**	**PFQ121**	**PFQ169**
0/160 psi/kPa	**PFQ805**	**PFQ905**	**PFQ122**	**PFQ170**
0/200 psi/kPa	**PFQ806**	**PFQ906**	**PFQ123**	**PFQ171**
0/300 psi/kPa	**PFQ807**	**PFQ907**	**PFQ124**	**PFQ175**
0/400 psi/kPa	**PFQ817**	PFQ917	**PFQ125**	PFQ177
0/600 psi/kPa	**PFQ808**	**PFQ908**	**PFQ126**	**PFQ178**
0/1,000 psi/kPa	**PFQ809**	**PFQ909**	**PFQ127**	PFQ179
0/1,500 psi/kPa	**PFQ816**	**PFQ914**	**PFQ128**	PFQ180
0/2,000 psi/kPa	**PFQ810**	**PFQ910**	**PFQ129**	PFQ181
0/3,000 psi/kPa	**PFQ811**	**PFQ911**	**PFQ137**	**PFQ182**
0/4,000 psi/kPa	PFQ819	PFQ919	PFQ130	-
0/5,000 psi/kPa	**PFQ812**	**PFQ912**	**PFQ138**	**PFQ183**
0/6,000 psi/kPa	**PFQ814**	**PFQ915**	**PFQ139**	PFQ184
0/7,500 psi/kPa	**PFQ818**	PFQ918	PFQ144	PFQ186
0/10,000 psi/kPa	**PFQ813**	**PFQ913**	**PFQ145**	PFQ190
0/15,000 psi/kPa	-	-	PFQ146	PFQ191

Dial Size	2.5" (63mm)	
Connection	1/4" Bottom	1/4" Back (CB)
Movement, Socket, Tube	Brass	
30" Hg Vac/bar	PFQ801R1R11	PFQ900R1R11
30"/0/15 psi/bar	PFQ790R1R11	PFQ890R1R11
30"/0/30 psi/bar	PFQ798R1R11	PFQ898R1R11
30"/0/60 psi/bar	PFQ799R1R11	PFQ899R1R11
30"/0/100 psi/bar	PFQ791R1R11	PFQ891R1R11
30"/0/160 psi/bar	PFQ792R1R11	PFQ892R1R11
30"/0/200 psi/bar	PFQ794R1R11	PFQ894R1R11
30"/0/300 psi/bar	PFQ795R1R11	PFQ895R1R11
0/15 psi/bar	PFQ800R1R11	PFQ901R1R11
0/30 psi/bar	PFQ802R1R11	PFQ902R1R11
0/60 psi/bar	PFQ803R1R11	PFQ903R1R11
0/100 psi/bar	PFQ804R1R11	PFQ904R1R11
0/160 psi/bar	PFQ805R1R11	PFQ905R1R11
0/200 psi/bar	PFQ806R1R11	PFQ906R1R11
0/300 psi/bar	PFQ807R1R11	PFQ907R1R11
0/400 psi/bar	PFQ817R1R11	PFQ917R1R11
0/600 psi/bar	PFQ808R1R11	PFQ908R1R11
0/1,000 psi/bar	PFQ809R1R11	PFQ909R1R11
0/1,500 psi/bar	PFQ816R1R11	PFQ914R1R11
0/2,000 psi/bar	PFQ810R1R11	PFQ910R1R11
0/3,000 psi/bar	PFQ811R1R11	PFQ911R1R11
0/4,000 psi/bar	PFQ819R1R11	PFQ919R1R11
0/5,000 psi/bar	PFQ812R1R11	PFQ912R1R11
0/6,000 psi/bar	PFQ814R1R11	PFQ915R1R11
0/7,500 psi/bar	PFQ818R1R11	PFQ918R1R11
0/10,000 psi/bar	PFQ813R1R11	PFQ913R1R11

Other ranges and connection sizes available upon request. For scale change, refer to How to Order Guide for scale codes.
For options, attach suffix to end of order code: i.e. PFQ801-25DRY for DRY CASE

Option suffix:
25BF = 2.5" (63mm) Back flange
25DRY = Supply 2.5" (63mm) gauge dry
25FF = 2.5" (63mm) Front flange
25UC = 2.5" (63mm) U-Clamp
EN = EN837-1 compliant
SF25 = 2.5" (63mm) Silicone filled

Dual Scale Order Codes (products in bold are normally stock in North America)

Dial Size	2.5” (63mm)
Connection	7/16”-20 SAE Bottom
Movement, Socket, Tube	Brass
30” Hg Vac/bar	PFQ3643
30”/0/15 psi/bar	PFQ3644
30”/0/30 psi/bar	PFQ3645
30”/0/60 psi/bar	PFQ3646
30”/0/100 psi/bar	PFQ3647
30”/0/150 psi/bar	PFQ3648
30”/0/200 psi/bar	PFQ3649
30”/0/300 psi/bar	PFQ3650
0/15 psi/bar	PFQ3651
0/30 psi/bar	PFQ3652
0/60 psi/bar	PFQ3653
0/100 psi/bar	PFQ3654
0/160 psi/bar	PFQ3655
0/200 psi/bar	PFQ3656
0/300 psi/bar	PFQ3657
0/400 psi/bar	PFQ3658
0/600 psi/bar	PFQ3659
0/1,000 psi/bar	PFQ3660
0/1,500 psi/bar	PFQ3661
0/2,000 psi/bar	PFQ3662
0/3,000 psi/bar	**PFQ3663**
0/5,000 psi/bar	**PFQ3664**
0/6,000 psi/bar	PFQ3665
0/7,500 psi/bar	PFQ3666
0/10,000 psi/bar	PFQ3667
0/15,000 psi/bar	PFQ3668

PFQ-LF Order Codes (products in bold are normally stock in North America)

Dial Size	2.5” (63mm)	
Connection	1/4” Bottom	1/4” Back (CB)
Socket, Tube	Lead Free Brass	
30” Hg Vac/kPa	**PFQ801LF**	PFQ900LF
30”/0/15 psi/kPa	PFQ790LF	PFQ890LF
30”/0/30 psi/kPa	PFQ798LF	PFQ898LF
30”/0/60 psi/kPa	PFQ799LF	PFQ899LF
30”/0/100 psi/kPa	PFQ791LF	PFQ891LF
30”/0/150 psi/kPa	PFQ792LF	PFQ892LF
30”/0/200 psi/kPa	PFQ794LF	PFQ894LF
30”/0/300 psi/kPa	PFQ795LF	PFQ895LF
0/15 psi/kPa	**PFQ800LF**	PFQ901LF
0/30 psi/kPa	**PFQ802LF**	PFQ902LF
0/60 psi/kPa	**PFQ803LF**	PFQ903LF
0/100 psi/kPa	**PFQ804LF**	PFQ904LF
0/160 psi/kPa	**PFQ805LF**	PFQ905LF
0/200 psi/kPa	**PFQ806LF**	PFQ906LF
0/300 psi/kPa	**PFQ807LF**	PFQ907LF
0/400 psi/kPa	**PFQ817LF**	PFQ917LF
0/600 psi/kPa	**PFQ808LF**	PFQ908LF
0/1,000 psi/kPa	**PFQ809LF**	PFQ909LF
0/1,500 psi/kPa	PFQ816LF	PFQ914LF
0/2,000 psi/kPa	PFQ810LF	PFQ910LF
0/3,000 psi/kPa	PFQ811LF	PFQ911LF
0/5,000 psi/kPa	PFQ812LF	PFQ912LF
0/6,000 psi/kPa	PFQ814LF	PFQ915LF
0/7,500 psi/kPa	PFQ818LF	PFQ918LF
0/10,000 psi/kPa	PFQ813LF	PFQ913LF
0/15,000 psi/kPa	-	-

Other ranges and connection sizes available upon request. For scale change, refer to How to Order Guide for scale codes.
For options, attach suffix to end of order code: i.e. PFQ3651-25DRY for DRY CASE

Option suffix:
25BF = 2.5” (63mm) Back flange
25DRY = Supply 2.5” (63mm) gauge dry
25FF = 2.5” (63mm) Front flange
25UC = 2.5” (63mm) U-Clamp
EN = EN837-1 compliant
SF25 = 2.5” (63mm) Silicone filled

Stainless Steel Liquid Filled Gauge, Lead Free Stainless Steel Liquid Filled Gauge

Single Scale Order Codes (products in bold are normally stock in North America)

Dial Size	4" (100mm)							
Connection	1/4" Bottom	1/4" Back (CB)	1/4" Bottom	1/4" Back (CB)	1/2" Bottom	1/2" Back (CB)	1/2" Bottom	1/2" Back (CB)
Movement, Socket, Tube	Brass		SS		Brass		SS	
30" Hg Vac	PFQ700R1	PFQ730R1	PFQ760R1	PFQ1260R1	PFQ1234R1	PFQ1285R1	PFQ1535R1	PFQ1559R1
30"/0/15 psi	PFQ701R1	PFQ731R1	PFQ761R1	PFQ1261R1	PFQ1235R1	PFQ1286R1	PFQ1536R1	PFQ1560R1
30"/0/30 psi	PFQ702R1	PFQ732R1	PFQ762R1	PFQ1262R1	PFQ1236R1	PFQ1287R1	PFQ1537R1	PFQ1561R1
30"/0/60 psi	PFQ703R1	PFQ733R1	PFQ763R1	PFQ1263R1	PFQ1237R1	PFQ1288R1	PFQ1538R1	PFQ1562R1
30"/0/100 psi	PFQ704R1	PFQ734R1	PFQ764R1	PFQ1264R1	PFQ1238R1	PFQ1289R1	PFQ1539R1	PFQ1563R1
30"/0/160 psi	PFQ705R1	PFQ735R1	PFQ765R1	PFQ1265R1	PFQ1239R1	PFQ1290R1	PFQ1540R1	PFQ1564R1
30"/0/200 psi	PFQ706R1	PFQ736R1	PFQ766R1	PFQ1266R1	PFQ1240R1	PFQ1291R1	PFQ1541R1	PFQ1565R1
30"/0/300 psi	PFQ707R1	PFQ737R1	PFQ767R1	PFQ1267R1	PFQ1241R1	PFQ1292R1	PFQ1542R1	PFQ1566R1
0/15 psi	PFQ708R1	PFQ738R1	PFQ768R1	PFQ1268R1	PFQ1242R1	PFQ1293R1	PFQ1543R1	PFQ1567R1
0/30 psi	PFQ709R1	PFQ739R1	PFQ769R1	PFQ1269R1	PFQ1243R1	PFQ1294R1	PFQ1544R1	PFQ1568R1
0/60 psi	PFQ710R1	PFQ740R1	PFQ770R1	PFQ1270R1	PFQ1244R1	PFQ1295R1	PFQ1545R1	PFQ1569R1
0/100 psi	**PFQ711R1**	PFQ741R1	PFQ771R1	PFQ1271R1	PFQ1245R1	PFQ1296R1	PFQ1546R1	PFQ1570R1
0/160 psi	**PFQ712R1**	PFQ742R1	PFQ772R1	PFQ1272R1	PFQ1246R1	PFQ1298R1	PFQ1547R1	PFQ1571R1
0/200 psi	**PFQ713R1**	PFQ743R1	PFQ773R1	PFQ1273R1	**PFQ1247R1**	PFQ1524R1	PFQ1548R1	PFQ1572R1
0/300 psi	**PFQ714R1**	PFQ744R1	PFQ774R1	PFQ1274R1	PFQ1248R1	PFQ1525R1	PFQ1549R1	PFQ1573R1
0/400 psi	PFQ715R1	PFQ745R1	PFQ775R1	PFQ1275R1	PFQ1249R1	PFQ1526R1	PFQ1550R1	PFQ1574R1
0/600 psi	PFQ716R1	PFQ746R1	PFQ776R1	PFQ1276R1	PFQ1250R1	PFQ1527R1	PFQ1551R1	PFQ1575R1
0/1,000 psi	PFQ724R1	PFQ192R1	PFQ1528R1	PFQ1552R1	**PFQ717R1**	PFQ747R1	PFQ777R1	PFQ1277R1
0/1,500 psi	PFQ725R1	PFQ241R1	PFQ1529R1	PFQ1553R1	PFQ718R1	PFQ748R1	PFQ778R1	PFQ1278R1
0/2,000 psi	PFQ726R1	PFQ242R1	PFQ1530R1	PFQ1554R1	**PFQ719R1**	PFQ749R1	PFQ779R1	PFQ1279R1
0/3,000 psi	PFQ727R1	PFQ243R1	PFQ1531R1	PFQ1555R1	**PFQ720R1**	PFQ750R1	PFQ780R1	PFQ1280R1
0/5,000 psi	PFQ728R1	PFQ244R1	PFQ1532R1	PFQ1556R1	PFQ721R1	PFQ751R1	PFQ781R1	PFQ1281R1
0/6,000 psi	PFQ346R1	PFQ246R1	-	-	PFQ784R1	PFQ785R1	PFQ789R1	PFQ1284R1
0/7,500 psi	PFQ347R1	PFQ247R1	-	-	PFQ786R1	PFQ886R1	-	-
0/10,000 psi	PFQ729R1	PFQ360R1	PFQ1533R1	PFQ1557R1	PFQ722R1	PFQ752R1	PFQ782R1	PFQ1282R1
0/15,000 psi	PFQ261R1	PFQ361R1	PFQ1534R1	PFQ1558R1	PFQ723R1	PFQ753R1	PFQ783R1	PFQ1283R1

Other ranges and connection sizes available upon request. For scale change, refer to How to Order Guide for scale codes.
For options, attach suffix to end of order code: i.e. PFQ728-DRY for DRY CASE

Option suffix:

4BF = 4" (100mm) Back flange
4FF = 4" (100mm) Front flange
4UC-P = 4" (100mm) U-Clamp (for SS movement)
4UC-Q = 4" (100mm) U-Clamp (for brass movement)
DRY = Supply gauge dry
EN = EN837-1 compliant
REST = Restrictor screw
SF4 = 4" (100mm) Silicone filled

Dual Scale Order Codes (products in bold are normally stock in North America)

Dial Size	4” (100mm)							
Connection	1/4” Bottom	1/4” Back (CB)	1/4” Bottom	1/4” Back (CB)	1/2” Bottom	1/2” Back (CB)	1/2” Bottom	1/2” Back (CB)
Movement, Socket, Tube	Brass		SS		Brass		SS	
30” Hg Vac/kPa	**PFQ700**	PFQ730	**PFQ760**	PFQ1260	PFQ1234	PFQ1285	PFQ1535	PFQ1559
30”/0/15 psi/kPa	**PFQ701**	PFQ731	PFQ761	PFQ1261	PFQ1235	PFQ1286	**PFQ1536**	PFQ1560
30”/0/30 psi/kPa	**PFQ702**	PFQ732	PFQ762	PFQ1262	PFQ1236	PFQ1287	PFQ1537	PFQ1561
30”/0/60 psi/kPa	PFQ703	PFQ733	PFQ763	PFQ1263	PFQ1237	PFQ1288	PFQ1538	PFQ1562
30”/0/100 psi/kPa	**PFQ704**	PFQ734	PFQ764	PFQ1264	PFQ1238	PFQ1289	PFQ1539	PFQ1563
30”/0/150 psi/kPa	**PFQ705**	PFQ735	PFQ765	PFQ1265	PFQ1239	PFQ1290	PFQ1540	PFQ1564
30”/0/200 psi/kPa	**PFQ706**	PFQ736	PFQ766	PFQ1266	PFQ1240	PFQ1291	PFQ1541	PFQ1565
30”/0/300 psi/kPa	**PFQ707**	PFQ737	PFQ767	PFQ1267	PFQ1241	PFQ1292	PFQ1542	PFQ1566
0/15 psi/kPa	**PFQ708**	PFQ738	PFQ768	PFQ1268	PFQ1242	PFQ1293	PFQ1543	PFQ1567
0/30 psi/kPa	**PFQ709**	PFQ739	**PFQ769**	PFQ1269	PFQ1243	PFQ1294	PFQ1544	PFQ1568
0/60 psi/kPa	**PFQ710**	PFQ740	**PFQ770**	PFQ1270	PFQ1244	PFQ1295	PFQ1545	PFQ1569
0/100 psi/kPa	**PFQ711**	**PFQ741**	**PFQ771**	PFQ1271	PFQ1245	PFQ1296	**PFQ1546**	PFQ1570
0/160 psi/kPa	**PFQ712**	**PFQ742**	**PFQ772**	PFQ1272	PFQ1246	PFQ1298	**PFQ1547**	PFQ1571
0/200 psi/kPa	**PFQ713**	PFQ743	**PFQ773**	PFQ1273	PFQ1247	PFQ1524	**PFQ1548**	PFQ1572
0/300 psi/kPa	**PFQ714**	PFQ744	**PFQ774**	PFQ1274	**PFQ1248**	PFQ1525	**PFQ1549**	PFQ1573
0/400 psi/kPa	**PFQ715**	PFQ745	PFQ775	PFQ1275	PFQ1249	PFQ1526	PFQ1550	PFQ1574
0/600 psi/kPa	**PFQ716**	PFQ746	**PFQ776**	PFQ1276	PFQ1250	PFQ1527	**PFQ1551**	PFQ1575
0/1,000 psi/kPa	PFQ724	PFQ192	PFQ1528	PFQ1552	PFQ717	PFQ747	**PFQ777**	PFQ1277
0/1,500 psi/kPa	PFQ725	PFQ241	PFQ1529	PFQ1553	PFQ718	PFQ748	PFQ778	PFQ1278
0/2,000 psi/kPa	PFQ726	PFQ242	PFQ1530	PFQ1554	PFQ719	PFQ749	PFQ779	PFQ1279
0/3,000 psi/kPa	PFQ727	PFQ243	PFQ1531	PFQ1555	PFQ720	PFQ750	PFQ780	PFQ1280
0/5,000 psi/kPa	PFQ728	PFQ244	PFQ1532	PFQ1556	**PFQ721**	PFQ751	PFQ781	PFQ1281
0/6,000 psi/kPa	PFQ346	PFQ246	-	-	PFQ784	PFQ785	PFQ789	PFQ1284
0/7,500 psi/kPa	PFQ347	PFQ247	-	-	-	-	-	-
0/10,000 psi/kPa	PFQ729	PFQ360	PFQ1533	PFQ1557	**PFQ722**	PFQ752	PFQ782	PFQ1282
0/15,000 psi/kPa	PFQ261	PFQ361	PFQ1534	PFQ1558	PFQ723	PFQ753	PFQ783	PFQ1283

Other ranges and connection sizes available upon request. For scale change, refer to How to Order Guide for scale codes.
For options, attach suffix to end of order code: i.e. PFQ721-DRY for DRY CASE

Option suffix:
4BF = 4” (100mm) Back flange
4FF = 4” (100mm) Front flange
4UC-P = 4” (100mm) U-Clamp (for SS movement)
4UC-Q = 4” (100mm) U-Clamp (for brass movement)
DRY = Supply gauge dry
EN = EN837-1 compliant
SF4 = 4” (100mm) Silicone filled

PFQ-LF Order Codes (products in bold are normally stock in North America)

Dial Size	4” (100mm)			
Connection	1/4” Bottom	1/4” Back (CB)	1/2” Bottom	1/2” Back (CB)
Socket, Tube	Lead Free Brass			
30” Hg Vac/kPa	**PFQ700LF**	PFQ730LF	PFQ1234LF	PFQ1285LF
30”/0/15 psi/kPa	PFQ701LF	PFQ731LF	PFQ1235LF	PFQ1286LF
30”/0/30 psi/kPa	PFQ702LF	PFQ732LF	PFQ1236LF	PFQ1287LF
30”/0/60 psi/kPa	PFQ703LF	PFQ733LF	PFQ1237LF	PFQ1288LF
30”/0/100 psi/kPa	PFQ704LF	PFQ734LF	PFQ1238LF	PFQ1289LF
30”/0/150 psi/kPa	PFQ705LF	PFQ735LF	PFQ1239LF	PFQ1290LF
30”/0/200 psi/kPa	PFQ706LF	PFQ736LF	PFQ1240LF	PFQ1291LF
30”/0/300 psi/kPa	PFQ707LF	PFQ737LF	PFQ1241LF	PFQ1292LF
0/15 psi/kPa	PFQ708LF	PFQ738LF	PFQ1242LF	PFQ1293LF
0/30 psi/kPa	**PFQ709LF**	PFQ739LF	PFQ1243LF	PFQ1294LF
0/60 psi/kPa	**PFQ710LF**	PFQ740LF	PFQ1244LF	PFQ1295LF
0/100 psi/kPa	**PFQ711LF**	PFQ741LF	PFQ1245LF	PFQ1296LF
0/160 psi/kPa	**PFQ712LF**	PFQ742LF	PFQ1246LF	PFQ1298LF
0/200 psi/kPa	**PFQ713LF**	PFQ743LF	PFQ1247LF	PFQ1524LF
0/300 psi/kPa	**PFQ714LF**	PFQ744LF	PFQ1248LF	PFQ1525LF
0/400 psi/kPa	**PFQ715LF**	PFQ745LF	PFQ1249LF	PFQ1526LF
0/600 psi/kPa	**PFQ716LF**	PFQ746LF	PFQ1250LF	PFQ1527LF
0/1,000 psi/kPa	**PFQ724LF**	PFQ192LF	PFQ717LF	PFQ747LF
0/1,500 psi/kPa	PFQ725LF	PFQ241LF	PFQ718LF	PFQ748LF
0/2,000 psi/kPa	PFQ726LF	PFQ242LF	PFQ719LF	PFQ749LF
0/3,000 psi/kPa	PFQ727LF	PFQ243LF	PFQ720LF	PFQ750LF
0/5,000 psi/kPa	PFQ728LF	PFQ244LF	PFQ721LF	PFQ751LF
0/6,000 psi/kPa	PFQ346LF	PFQ246LF	PFQ784LF	PFQ785LF
0/7,500 psi/kPa	PFQ347LF	PFQ247LF	PFQ786LF	PFQ886LF
0/10,000 psi/kPa	PFQ729LF	PFQ360LF	PFQ722LF	PFQ752LF
0/15,000 psi/kPa	PFQ261LF	PFQ361LF	PFQ723LF	PFQ753LF

Other ranges and connection sizes available upon request. For scale change, refer to How to Order Guide for scale codes.
For options, attach suffix to end of order code: i.e. PFQ728LF-DRY for DRY CASE

Option suffix:
4BF = 4” (100mm) Back flange
4FF = 4” (100mm) Front flange
4UC-P = 4” (100mm) U-Clamp (for SS movement)
4UC-Q = 4” (100mm) U-Clamp (for brass movement)
DRY = Supply gauge dry
EN = EN837-1 compliant
SF4 = 4” (100mm) Silicone filled

1.5” Back Connection with Front Flange and U-Clamp

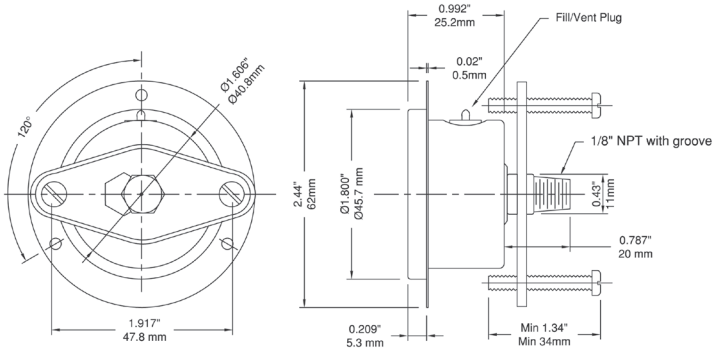

2” Bottom Connection

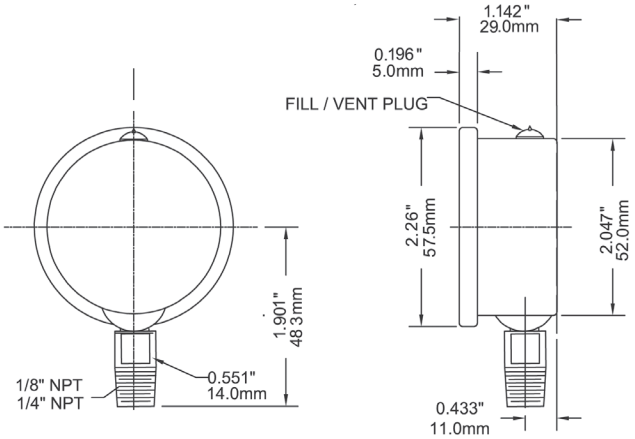

2.5” Back Connection with Front Flange

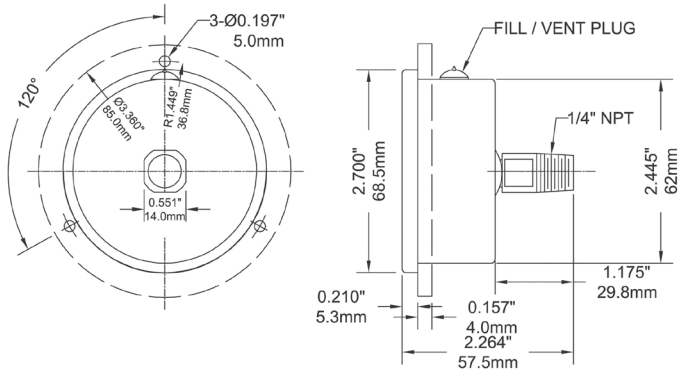

2.5” Back Connection with U-Clamp

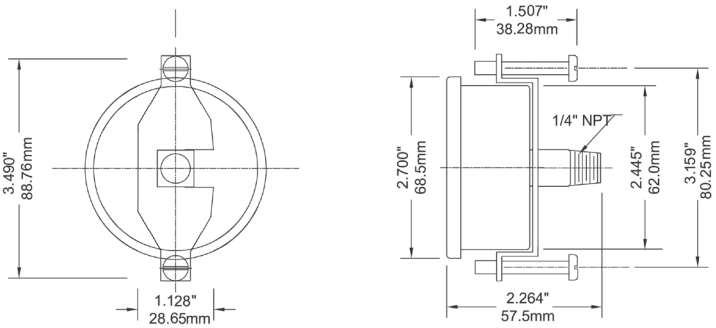

2.5” Bottom Connection SAE

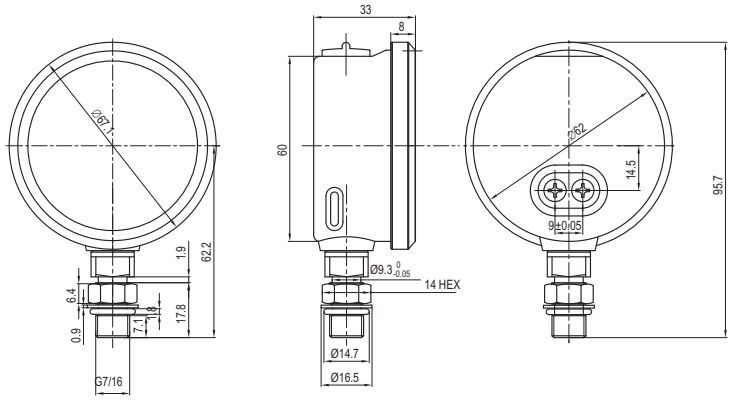

Dimensions in mm

4” Back Connection with Front Flange

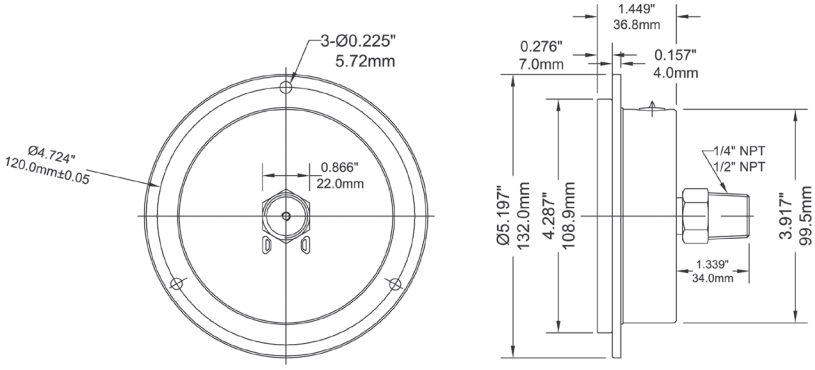

PN2 NACE Liquid Filled Gauge - MR0175-2002

Description & Features:

- Designed for sour gas applications requiring NACE Standards MR0175-2002 (NACE Standards MR0103-2003 available)
- Glycerin and H_2O filled case
- Blow out back plug
- Under and overload stops
- Wetted parts meet all hardness requirements
- ASME B40.100 compliant (EN837-1 available)
- CRN registered
- 5 year warranty

Applications:

- Sour gas applications requiring gauges that meet NACE International Standards

Specifications	
Dial	4” (100mm) and 6” (150mm) aluminum with black and red markings
Case	304 SS
Lens	Laminated safety glass
Ring	304 SS, bayonet
Socket	316L SS
Connection	1/4” or 1/2” NPT, bottom or back
Bourdon Tube	316L SS
Movement	304 SS with under and overload stops
Pointer	Aluminum, anodized black, micrometer adjustable
Fill Liquid	Glycerin/H_2O
Over-pressure Limit	25% for pressures up to 1,450 psi (9,998 kPa), 15% for pressures over 1,450 psi (9,998 kPa)
Ambient/Process Temperature	Dry: -40°F to 250°F (-40°C to 120°C) Glycerin Water: -40°F to 150°F (-40°C to 65°C)
Accuracy	±1% ANSI/ASME Grade 1A
Enclosure Rating	IP66

Order Codes (products in bold are normally stock in North America)

Dial Size	4” (100mm)				6” (150mm)	
Connection	1/4” Bottom	1/4” Back (LB)	1/2” Bottom	1/2” Back (LB)	1/2” Bottom	1/2” Back (LB)
30” Hg Vac/kPa	PN2640N	PN21090N	PN2655N	-	PN21100N	-
30”/0/15 psi/kPa	PN21036N	-	PN21044N	-	PN21101N	-
30”/0/30 psi/kPa	PN21037N	-	PN21045N	-	PN21102N	-
30”/0/60 psi/kPa	PN21038N	-	PN21046N	-	PN21103N	-
30”/0/100 psi/kPa	PN21039N	-	PN21047N	-	PN21104N	-
30”/0/150 psi/kPa	PN21040N	-	PN21048N	-	PN21105N	-
30”/0/200 psi/kPa	PN21042N	-	PN21050N	-	PN21106N	-
30”/0/300 psi/kPa	PN21043N	-	PN21051N	-	PN21107N	-
0/15 psi/kPa	PN2641N	PN21091N	PN2656N	-	PN21108N	-
0/30 psi/kPa	PN2642N	PN21092N	**PN2657N**	-	PN21109N	-
0/60 psi/kPa	PN2643N	PN21093N	PN2658N	-	PN21110N	-
0/100 psi/kPa	PN2644N	PN21094N	**PN2659N**	-	PN21111N	-
0/160 psi/kPa	PN2645N	PN21095N	**PN2660N**	-	PN21112N	-
0/200 psi/kPa	PN2646N	PN21096N	**PN2661N**	-	PN21113N	-
0/300 psi/kPa	PN2647N	PN21097N	**PN2662N**	-	PN21114N	-
0/400 psi/kPa	PN2650N	PN2150N	PN2666N	-	PN21115N	-
0/600 psi/kPa	PN2648N	PN21098N	**PN2663N**	-	PN21116N	-
0/1,000 psi/kPa	PN2649N	PN21099N	**PN2664N**	-	PN21117N	PN21217N
0/1,500 psi/kPa	-	-	**PN2665N**	PN21190N	PN21118N	PN21218N
0/2,000 psi/kPa	-	-	**PN2667N**	PN21191N	PN21119N	PN21219N
0/3,000 psi/kPa	-	-	**PN2668N**	PN21192N	PN21120N	PN21220N
0/4,000 psi/kPa	-	-	PN2701N	PN2702N	PN21121N	PN21221N
0/5,000 psi/kPa	-	-	**PN2669N**	PN21193N	PN21122N	PN21222N
0/6,000 psi/kPa	-	-	PN2675N	PN2175N	PN21123N	PN21223N
0/10,000 psi/kPa	-	-	**PN2670N**	PN21194N	PN21124N	PN21224N
0/15,000 psi/kPa	-	-	PN2671N	PN21195N	PN21125N	PN21225N
0/20,000 psi/kPa	-	-	PN2672N	PN21196N	PN21126N	PN21226N

Other ranges and connection sizes available upon request. For scale change, refer to How to Order Guide for scale codes.

For options, attach suffix to end of order code: i.e. PN22657N-DRY for DRY CASE

Option suffix:

4BF = 4” (100mm) Back flange
4FF = 4” (100mm) Front flange
4NSS = 4” (100mm) SS case
4UC-P = 4” (100mm) U-Clamp premium

6BF = 6” (150mm) Back flange
6FF = 6” (150mm) Front flange
6NSS = 6” (150mm) SS case
6UC-P = 6” (150mm) U-Clamp premium

DRY = Supply gauge dry
EN = EN837-1 compliant
REST = Restrictor screw

4” Bottom Connection

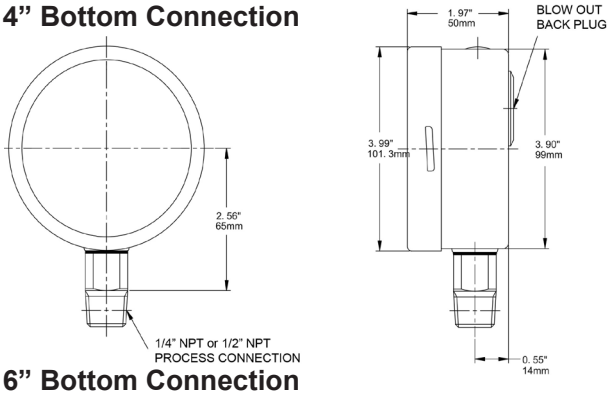

4” Back Connection

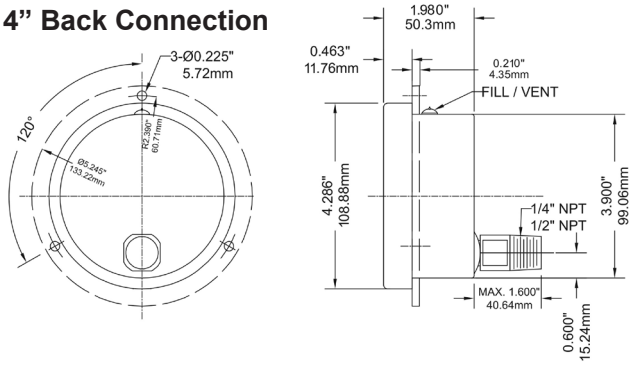

6” Bottom Connection

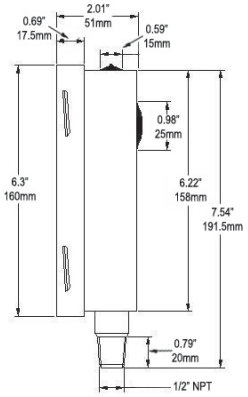

PSC Safety Case Gauge

Description & Features:

- Solid front blowout back for the ultimate in gauge safety
- Full rotary movement and micrometer pointer for ease in calibration
- Overload stop
- Stainless steel case, socket and internals
- Safety glass lens
- Restricted orifice standard
- ASME B40.100 compliant (EN837-1 available)
- CRN registered
- 5 year warranty

Applications:

- Used where operator safety is a must
- Outdoor and severe ambient and process conditions
- Use where harmful vibration and pulsation are present (with liquid filling)
- Oil and gas, petrochemical, mining and power installations

Specifications	
Dial	4” (100mm), 4.5” (115mm), 6” (150mm), white aluminum with black and red markings
Case	304 SS case with blowout back
Lens	4” (100mm), 6” (150mm): Laminated safety glass 4.5” (115mm): Tempered safety glass
Ring	SS bayonet
Socket	316L SS
Connection	1/4” or 1/2” NPT bottom
Bourdon Tube	316L SS
Movement	304 SS overload stop
Pointer	Aluminum, anodized black, micrometer adjustable
Over-pressure Limit	25% for pressures up to 1,450 psi (9,998 kPa), 15% for pressures over 1,450 psi (9,998 kPa)
Working Pressure	Maximum 75% of full scale value
Ambient Temperature	Dry: -40°F to 250°F (-40°C to 120°C) Glycerin Filled: -4°F to 150°F (-20°C to 65°C)
Process Temperature	-40°F to 250°F (-40°C to 120°C)
Accuracy	4” (100mm), 6” (150mm): ±1% ANSI/ASME Grade 1A 4.5” (115mm): ±0.5% ANSI/ASME Grade 2A
Enclosure Rating	4” (100mm), 6” (150mm): IP67 per EN60529-1 (IEC529-1) 4.5” (115mm): IP65 per EN60529-1 (IEC529-1)

Order Codes

Dial Size	4” (100mm)		4.5” (115mm)		6” (150mm)	
Connection	1/4” Bottom	1/2” Bottom	1/4” Bottom	1/2” Bottom	1/4” Bottom	1/2” Bottom
30” Hg Vac/kPa	PSC248	PSC4870	PSC281	PSC4888	PSC283	PSC4906
30”/0/15 psi/kPa	PSC249	PSC4871	PSC282	PSC4889	PSC284	PSC4907
30”/0/30 psi/kPa	PSC257	PSC4872	PSC358	PSC4890	PSC285	PSC4908
30”/0/60 psi/kPa	PSC258	PSC4873	PSC359	PSC4891	PSC286	PSC4909
30”/0/100 psi/kPa	PSC259	PSC4874	PSC362	PSC4892	PSC287	PSC4910
30”/0/150 psi/kPa	PSC260	PSC4875	PSC363	PSC4893	PSC289	PSC4911
30”/0/200 psi/kPa	PSC261	PSC4876	PSC364	PSC4894	PSC296	PSC4912
30”/0/300 psi/kPa	PSC262	PSC4877	PSC365	PSC4895	PSC297	PSC4913
0/15 psi/kPa	PSC263	PSC4878	PSC366	PSC4896	PSC298	PSC4914
0/30 psi/kPa	PSC264	PSC4879	PSC367	PSC4897	PSC299	PSC4915
0/60 psi/kPa	PSC265	PSC4880	PSC368	PSC4898	PSC307	PSC4916
0/100 psi/kPa	PSC266	PSC4881	PSC369	PSC4899	PSC308	PSC4917
0/160 psi/kPa	PSC267	PSC4882	PSC370	PSC4900	PSC309	PSC4918
0/200 psi/kPa	PSC268	PSC4883	PSC371	PSC4901	PSC317	PSC4919
0/300 psi/kPa	PSC269	PSC4884	PSC372	PSC4902	PSC318	PSC4920
0/400 psi/kPa	PSC272	PSC4885	PSC373	PSC4903	PSC335	PSC4921
0/600 psi/kPa	PSC273	PSC4886	PSC374	PSC4904	PSC336	PSC4922
0/1,000 psi/kPa	-	PSC274	-	PSC375	-	PSC337
0/1,500 psi/kPa	-	PSC275	-	PSC376	-	PSC338
0/2,000 psi/kPa	-	PSC276	-	PSC377	-	PSC339
0/3,000 psi/kPa	-	PSC277	-	PSC378	-	PSC347
0/5,000 psi/kPa	-	PSC278	-	PSC379	-	PSC348
0/10,000 psi/kPa	-	PSC498	-	PSC380	-	PSC502
0/15,000 psi/kPa	-	PSC499	-	PSC381	-	PSC504
0/20,000 psi/kPa	-	PSC4887	-	PSC4905	-	PSC4923

Other ranges and connection sizes available upon request. For scale change, refer to How to Order Guide for scale codes.
For options, attach suffix to end of order code: i.e. PSC374-R1 for SINGLE SCALE PSI

Option suffix:

4CSS = 4” (100mm) 316 SS case
45CSS = 4.5” (115mm) 316 SS case
6CSS = 6” (150mm) 316 SS case
EN = EN837-1 compliant
G = Glycerin filled
R1 = Single scale psi

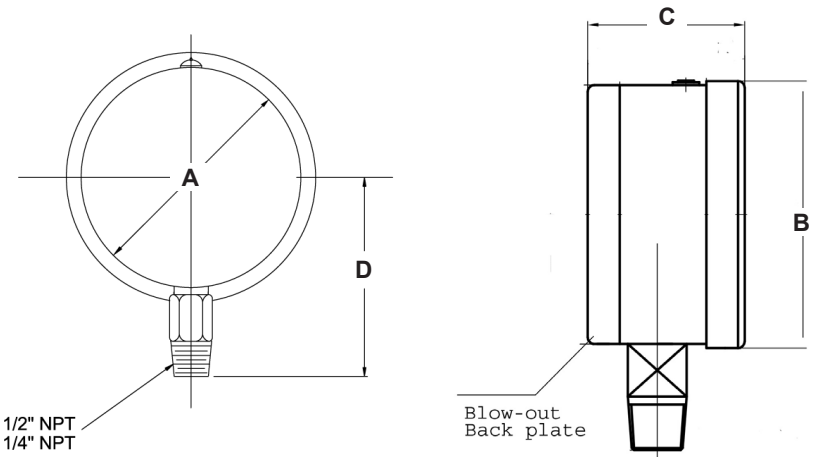

Dial	A	B	C	D
4” (100mm)	4.1” (105mm)	4.67” (119mm)	2.44” (57mm)	3.80” (96.5mm)
4.5” (115mm)	4.38” (111.3mm)	5.04” (128mm)	2.38” (60.5mm)	4.173” (106mm)
6” (150mm)	5.69” (144.6mm)	6.34” (161mm)	2.74” (69.5mm)	4.843” (123mm)

PTG Test Gauge

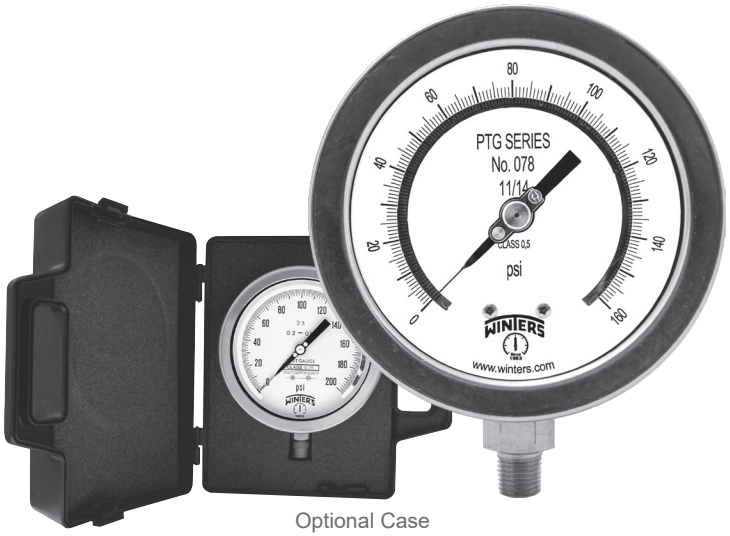

Optional Case

Description & Features:

- Highly accurate ±0.5% complete with calibration certificate traceable to NIST standards
- Mirrored anti-parallax dial
- Knife-edge pointer
- Protective carrying and storage case available
- ASME B40.100 compliant
- CRN registered
- 5 year warranty

Applications:

- Designed to be used where accuracy and repeatability are of prime importance
- Used in laboratories and instrument testing facilities

Specifications	
Dial	White aluminum with black markings and mirror band for precise instrument readings
Case	AISI 304 SS
Lens	4” (100mm): Polycarbonate 6” (150mm): Glass
Ring	AISI 304 SS
Socket	Brass
Connection	1/4” NPT or 1/2” NPT standard, bottom
Bourdon Tube	Phosphor bronze
Movement	Brass
Pointer	Aluminum, anodized black, micrometer adjustable, knife-edge
Welding	Silver alloy
Over-pressure Limit	30% of full scale value
Working Pressure	Maximum 75% of full scale value
Calibration Conditions	68°F (±5.4°F), 20°C (±3°C) for ambient and process temperatures at atmospheric pressure
Ambient/Process Temperature	-4°F to 150°F (-20°C to 65°C)
Accuracy	±0.5% ANSI/ASME Grade 2A
Enclosure Rating	IP65
Warning (brass internals only)	**WARNING:** This product can expose you to chemicals including lead, which is known to the State of California to cause cancer and birth defects or other reproductive harm. For more information go to www.P65Warnings.ca.gov.

Order Codes

Dial Size	4” (100mm)		6” (150mm)	
Connection	1/4” Bottom	1/2” Bottom	1/4” Bottom	1/2” Bottom
30” Hg Vac	PTG3999	-	PTG6999	PTG6055
0/15 psi	PTG4000	-	PTG6000	PTG6056
0/30 psi	PTG4001	-	PTG6001	PTG6057
0/60 psi	PTG4002	-	PTG6002	PTG6058
0/100 psi	PTG4003	-	PTG6003	PTG6059
0/160 psi	PTG4004	-	PTG6004	PTG6060
0/200 psi	PTG4005	-	PTG6005	PTG6061
0/300 psi	PTG4006	-	PTG6006	PTG6062
0/400 psi	PTG4007	-	PTG6007	PTG6063
0/600 psi	PTG4008	-	PTG6008	PTG6064
0/1,000 psi	-	PTG4009	PTG6016	PTG6009
0/1,500 psi	-	PTG4010	PTG6017	PTG6010
0/2,000 psi	-	PTG4011	PTG6018	PTG6011
0/3,000 psi	-	PTG4012	PTG6019	PTG6012
0/5,000 psi	-	PTG4013	PTG6053	PTG6013
0/10,000 psi	-	PTG4014	PTG6054	PTG6014

Other ranges and connection sizes available upon request. For scale change, refer to How to Order Guide for scale codes.
For options, attach suffix to end of order code: i.e. PTG2006-6BF for BACK FLANGE

Option suffix:
4BF = 4” (100mm) Back flange
4FF = 4” (100mm) Front flange
6BF = 6” (150mm) Back flange
6FF = 6” (150mm) Front flange
6FF = 6” (150mm) Front flange
TG4 = 4” (100mm) Test gauge case
TG6 = 6” (150mm) Test gauge case

4” Bottom Connection with Back Flange

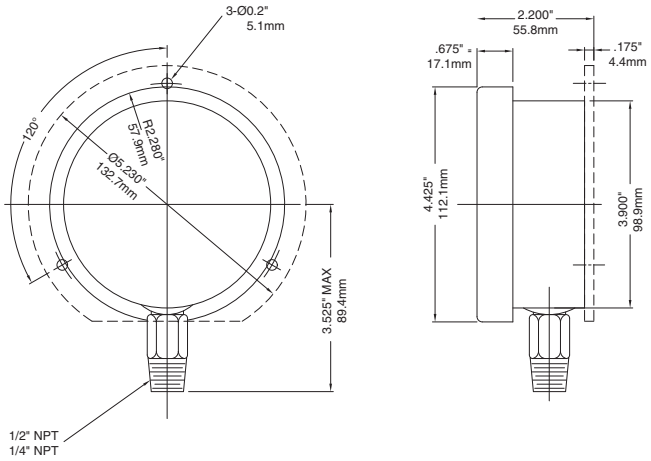

6” Bottom Connection

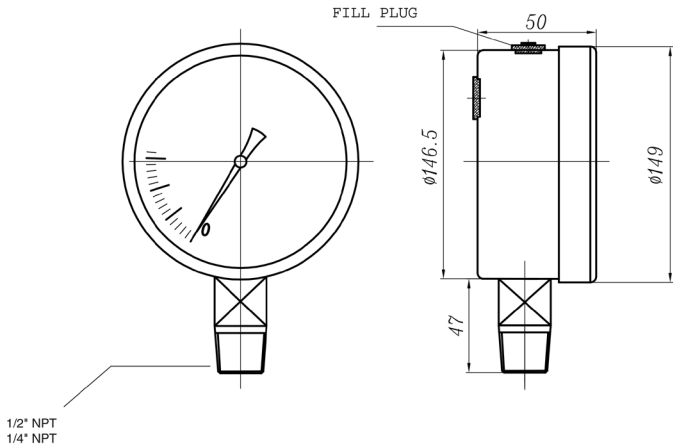

PTS Tube Stub Gauge

Description & Features:

- Gauge designed to be used with most standard double ferrule tube fittings, such as Parker A-Lok®
- Heavy duty, stainless steel, liquid-filled gauge
- Back, bottom, or panel mount configurations
- ±1.5% accuracy
- Facilitates 360° orientation
- Elimination of leak point
- PTFE free connection
- ASME B40.100 compliant
- CRN registered
- 5 year warranty

Applications:

- Specifically designed to be utilized with tube fitting applications in the fluid power sector
- Allows installation where space is limited
- Used where PTFE free connection is needed
- Used where gauge alignment is critical

Specifications	
Dial	2.5” (63mm) aluminum with red and black markings
Case	Grade 304 SS
Lens	Polycarbonate
Ring	304 SS, bayonet
Block	316L SS
Socket	316L SS
Connection	1/4” Tube Stub
Bourdon Tube	316L SS
Movement	304 SS
Pointer	Aluminum, anodized black
Welding	Laser welded socket to case
Fill Liquid	Glycerin
Over-pressure Limit	15% of full scale value
Gasket Materials	Buna N
Working Pressure	75% of full scale value
Ambient/Process Temperature	Dry: -40°F to 200°F (-40°C to 93°C) Glycerin Filled: -4°F to 150°F (-20°C to 65°C)
Accuracy	±1.5% of full scale value
Enclosure Rating	IP66 per EN60529-1 (IEC529-1)

A-Lok® is a registered trademark of Parker Hannifin Corporation

Single Scale Order Codes

Dial Size	2.5” (63mm)	
Connection	1/4” Tube Bottom	1/4” Tube Back (CB)
30” Hg Vac	PTS820R1-TS	PTS840R1-TS
30”/0/15 psi	PTS860R1-TS	PTS870R1-TS
30”/0/30 psi	PTS861R1-TS	PTS871R1-TS
30”/0/60 psi	PTS862R1-TS	PTS872R1-TS
30”/0/100 psi	PTS863R1-TS	PTS873R1-TS
30”/0/150 psi	PTS864R1-TS	PTS874R1-TS
30”/0/200 psi	PTS866R1-TS	PTS876R1-TS
30”/0/300 psi	PTS867R1-TS	PTS877R1-TS
0/15 psi	PTS821R1-TS	PTS921R1-TS
0/30 psi	PTS822R1-TS	PTS922R1-TS
0/60 psi	PTS823R1-TS	PTS923R1-TS
0/100 psi	PTS824R1-TS	PTS924R1-TS
0/160 psi	PTS825R1-TS	PTS925R1-TS
0/200 psi	PTS826R1-TS	PTS926R1-TS
0/300 psi	PTS827R1-TS	PTS927R1-TS
0/400 psi	PTS880R1-TS	PTS881R1-TS
0/600 psi	PTS828R1-TS	PTS928R1-TS
0/1,000 psi	PTS829R1-TS	PTS929R1-TS
0/1,500 psi	PTS835R1-TS	PTS935R1-TS
0/2,000 psi	PTS836R1-TS	PTS936R1-TS
0/3,000 psi	PTS831R1-TS	PTS931R1-TS
0/5,000 psi	PTS832R1-TS	PTS852R1-TS

Dual Scale Order Codes

Dial Size	2.5” (63mm)	
Connection	1/4” Tube Bottom	1/4” Tube Back (CB)
30” Hg Vac/kPa	PTS820-TS	PTS840-TS
30”/0/15 psi/kPa	PTS860-TS	PTS870-TS
30”/0/30 psi/kPa	PTS861-TS	PTS871-TS
30”/0/60 psi/kPa	PTS862-TS	PTS872-TS
30”/0/100 psi/kPa	PTS863-TS	PTS873-TS
30”/0/150 psi/kPa	PTS864-TS	PTS874-TS
30”/0/200 psi/kPa	PTS866-TS	PTS876-TS
30”/0/300 psi/kPa	PTS867-TS	PTS877-TS
0/15 psi/kPa	PTS821-TS	PTS921-TS
0/30 psi/kPa	PTS822-TS	PTS922-TS
0/60 psi/kPa	PTS823-TS	PTS923-TS
0/100 psi/kPa	PTS824-TS	PTS924-TS
0/160 psi/kPa	PTS825-TS	PTS925-TS
0/200 psi/kPa	PTS826-TS	PTS926-TS
0/300 psi/kPa	PTS827-TS	PTS927-TS
0/400 psi/kPa	PTS880-TS	PTS881-TS
0/600 psi/kPa	PTS828-TS	PTS928-TS
0/1,000 psi/kPa	PTS829-TS	PTS929-TS
0/1,500 psi/kPa	PTS835-TS	PTS935-TS
0/2,000 psi/kPa	PTS836-TS	PTS936-TS
0/3,000 psi/kPa	PTS831-TS	PTS931-TS
0/5,000 psi/kPa	PTS832-TS	PTS852-TS

Other ranges and connection sizes available upon request. For scale change, refer to How to Order Guide for scale codes.

For options, attach suffix to end of order code: i.e. PTS820-TS-25DRY for DRY CASE

Option suffix:

25BF = 2.5” (63mm) Back flange
25BOOT = 2.5” (63mm) Protective black rubber boot
25DRY = Supply 2.5” (63mm) gauge dry
25FF = 2.5” (63mm) Front flange
25UC = 2.5” (63mm) U-Clamp
SG-25 = 2.5” (63mm) Safety glass lens

2.5” Bottom Connection with Back Flange

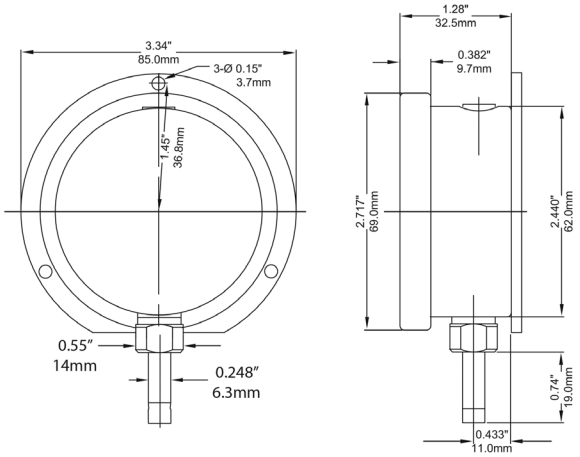

2.5” Back Connection with Back Flange

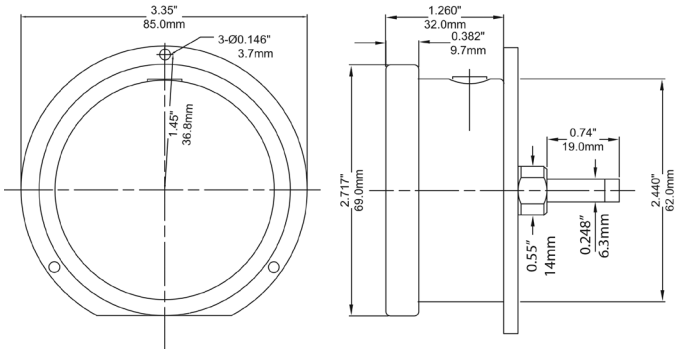

2.5” Back Connection with Front Flange

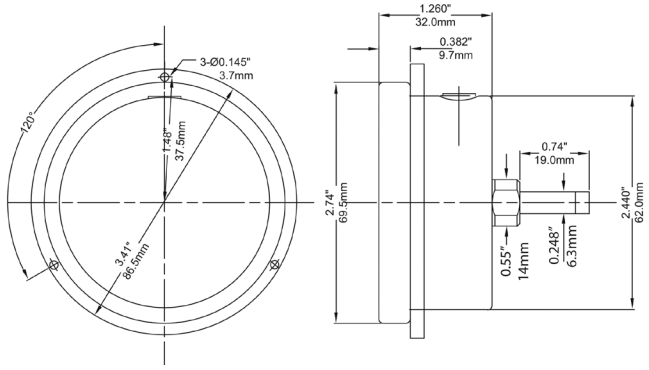

2.5” Back Connection with U-Clamp

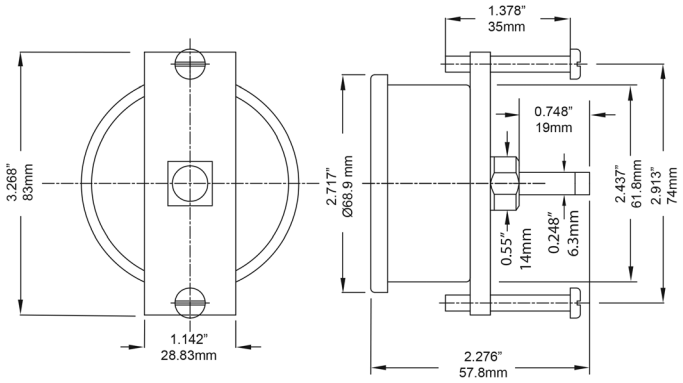

P9S 90 Series Gauge

Description & Features:

- A general-purpose gauge that is serviceable and pulsation resistant
- 1.5” (40mm) to 3.5” (90mm) dial sizes
- Dampened movement combined with a flutterless pointer
- Removable lens
- Zero-adjustment
- ASME B40.100 compliant
- CRN registered
- ±2-1-2% accuracy
- 5 year warranty

Applications:

- Compressors, filters, regulators, water pumps, paint sprayers and a variety of other rapid pressure fluctuation applications
- Suitable for non-clogging and non-corroding media

Specifications	
Dial	1.5” (40mm), 2” (50mm), 2.5” (63mm), 3.5” (90mm) white aluminum with black and red markings
Case	Steel, painted black
Lens	Acrylic, threaded
Socket	Brass
Connection	1/8” NPT or 1/4” NPT standard
Bourdon Tube	Phosphor bronze
Movement	Brass (flutterless) with zero adjustment
Pointer	Aluminum, black
Welding	<1,000 psi: 60% tin 40% lead, ≥1,000 psi: silver alloy
Over-pressure Limit	25% of full scale value
Working Pressure	Maximum 75% of full scale value
Ambient/Process Temperature	-40°F to 150°F (-40°C to 65°C)
Accuracy	±2-1-2% ANSI/ASME Grade A
Enclosure Rating	IP52
Warning	⚠ **WARNING:** This product can expose you to chemicals including lead, which is known to the State of California to cause cancer and birth defects or other reproductive harm. For more information go to www.P65Warnings.ca.gov.

1.5” Bottom Connection

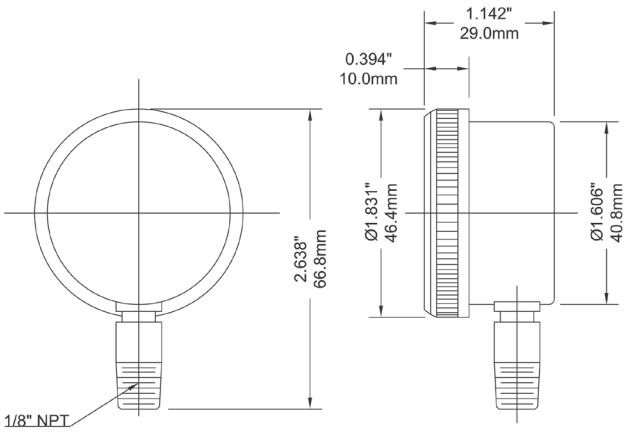

1.5” Back Connection

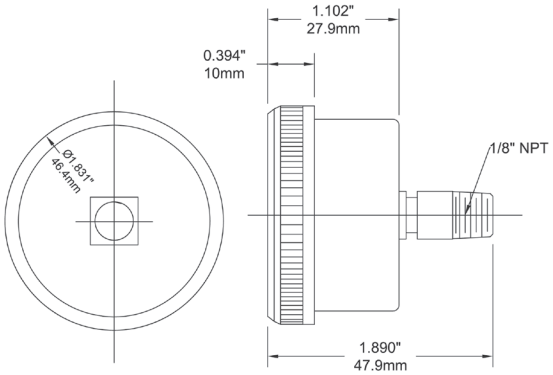

Order Codes (products in bold are normally stock in North America)

Dial Size	1.5” (40mm)		2” (50mm)				2.5” (63mm)		3.5” (90mm)	
Connection	1/8” Bottom	1/8” Back (CB)	1/8” Bottom	1/8” Back (CB)	1/4” Bottom	1/4” Back (CB)	1/4” Bottom	1/4” Back (CB)	1/4” Bottom	1/4” Back (CB)
30” Hg Vac/kPa	P9S901297	P9S901397	P9S90195	P9S901424	P9S90135	P9S901428	P9S90210	P9S901431	P9S90220	P9S901455
30”/0/15 psi/kPa	-	-	-	-	-	-	P9S90152	-	-	-
30”/0/30 psi/kPa	-	-	-	-	-	-	**P9S90153**	-	-	-
30”/0/60 psi/kPa	-	-	-	-	-	-	P9S90154	-	-	-
30”/0/100 psi/kPa	-	-	-	-	-	-	P9S90155	-	-	-
0/15 psi/kPa	P9S901299	**P9S901399**	P9S90196	P9S901425	**P9S90136**	**P9S901429**	**P9S90211**	P9S901436	P9S90229	P9S901464
0/30 psi/kPa	P9S901300	**P9S901400**	P9S90206	P9S901402	P9S90199	**P9S901403**	**P9S90212**	P9S901437	**P9S90221**	P9S901456
0/60 psi/kPa	**P9S901301**	P9S901401	P9S90207	P9S901404	P9S90201	**P9S901405**	**P9S90213**	P9S901438	P9S90222	P9S901457
0/100 psi/kPa	P9S901320	P9S901420	P9S90208	P9S901406	**P9S90202**	**P9S901407**	**P9S90214**	P9S901439	**P9S90223**	P9S901458
0/160 psi/kPa	P9S901321	**P9S901421**	P9S90197	P9S901408	P9S90203	**P9S901409**	**P9S90215**	P9S901440	P9S90224	P9S901459
0/200 psi/kPa	P9S901322	P9S901422	P9S90209	P9S901426	P9S90204	P9S901410	**P9S90216**	P9S901441	**P9S90225**	P9S901460
0/300 psi/kPa	P9S901323	P9S901423	P9S90198	P9S901427	P9S90205	P9S901411	P9S90217	P9S901442	P9S90226	P9S901461
0/400 psi/kPa	P9S901324	P9S901443	P9S901449	P9S901445	P9S901451	P9S901447	P9S90219	P9S901453	P9S90227	P9S901462
0/600 psi/kPa	P9S901325	**P9S901444**	P9S901450	P9S901446	P9S901452	P9S901448	P9S90218	P9S901454	P9S90228	P9S901463

Other ranges and connection sizes available upon request. For scale change, refer to How to Order Guide for scale codes.

2” Bottom Connection

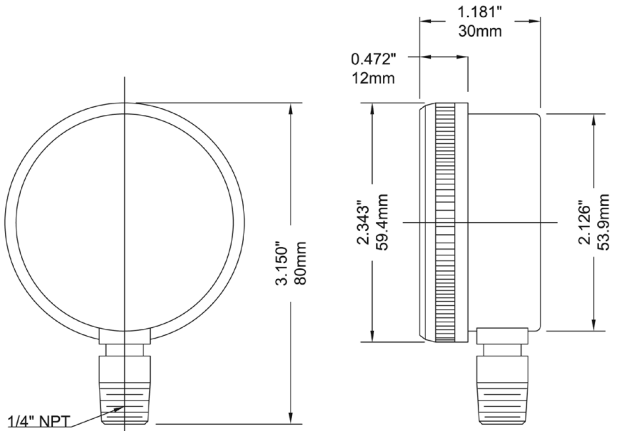

2” Back Connection

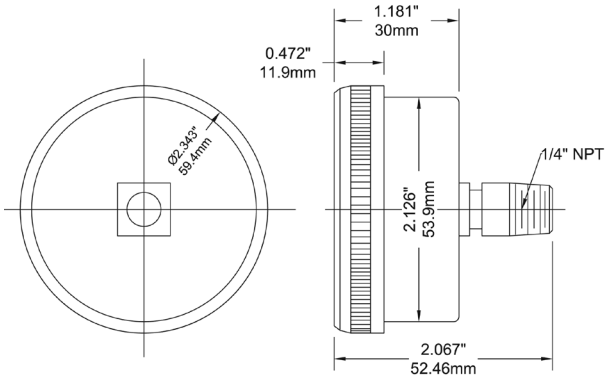

2.5” Bottom Connection

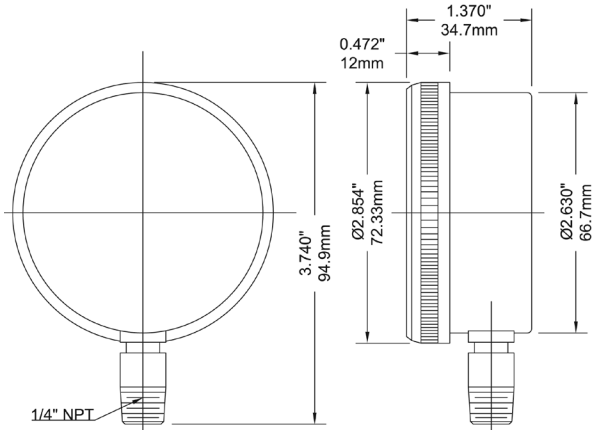

2.5” Back Connection

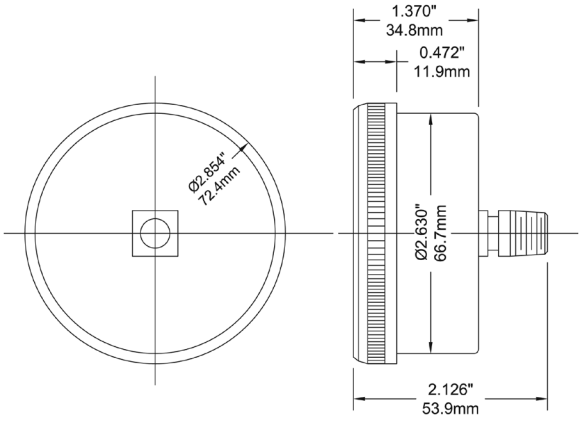

3.5” Bottom Connection

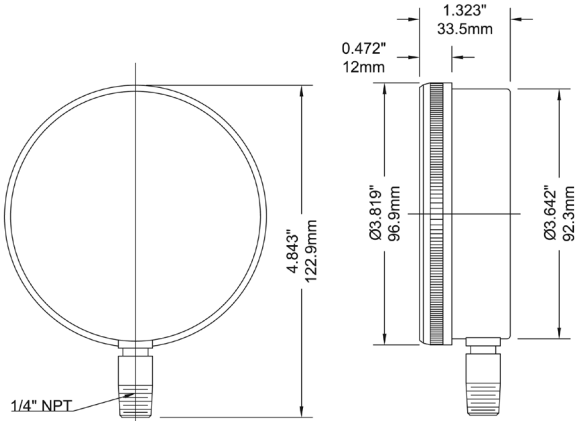

3.5” Back Connection

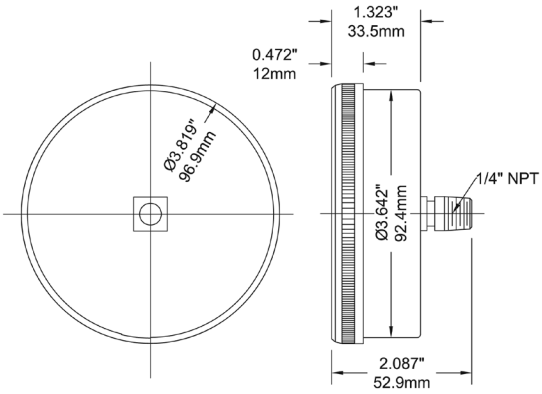

Description & Features:

- General purpose panel mounted gauge with 1.5” (40mm) to 3.5” (90mm) dial sizes
- Flutterless pointer
- Dampened movement
- Removable lens
- Zero-adjustment
- ±2-1-2% accuracy
- ASME B40.100 compliant
- CRN registered
- 5 year warranty

Applications:

- Panels, compressor equipment, water and oil pumps where rapid pressure fluctuations or system vibration require a stable pointer
- Suitable for non-clogging and non-corrossive media

Specifications	
Dial	1.5” (40mm), 2” (50mm), 2.5” (63mm), 3.5” (90mm), white aluminum with black and red markings
Case	Steel, painted black
Lens	Acrylic, threaded
Socket	Brass
Connection	1/8” NPT or 1/4” NPT standard
Bourdon Tube	Phosphor bronze
Movement	Brass (flutterless movement)
Pointer	Aluminum, black
Welding	Silver alloy
Over-pressure Limit	25% of full scale value
Working Pressure	Maximum 75% of full scale value
Ambient/Process Temperature	-40°F to 150°F (-40°C to 65°C)
Accuracy	±2-1-2% ANSI/ASME Grade A
Enclosure Rating	IP52
Warning	⚠ **WARNING:** This product can expose you to chemicals including lead, which is known to the State of California to cause cancer and birth defects or other reproductive harm. For more information go to www.P65Warnings.ca.gov.

Order Codes (products in bold are normally stock in North America)

Dial Size	1.5” (40mm)	2” (50mm)		2.5” (63mm)	3.5” (90mm)
Connection	1/8” Back (CB)	1/8” Back (CB)	1/4” Back (CB)	1/4” Back (CB)	1/4” Back (CB)
Panel Cut-out	1.69” (43mm)	2.11” (53.5mm)	2.11” (53.5mm)	2.66” (67.5mm)	3.68” (93.5mm)
Overall O.D.	1.85” (47.7mm)	2.27” (57.9mm)	2.27” (57.9mm)	2.82” (71.9mm)	3.94” (98.9mm)
30” Hg Vac/kPa	P9U901397UC	P9U901424UC	P9U901428UC	P9U901431UC	P9U901455UC
30”/0/15 psi/kPa	-	-	-	-	-
30”/0/30 psi/kPa	-	-	-	-	-
30”/0/60 psi/kPa	-	-	-	-	-
30”/0/100 psi/kPa	-	-	-	-	-
0/15 psi/kPa	P9U901399UC	P9U901425UC	P9U901429UC	P9U901436UC	P9U901464UC
0/30 psi/kPa	P9U901400UC	P9U901402UC	P9U901403UC	P9U901437UC	P9U901456UC
0/60 psi/kPa	P9U901401UC	P9U901404UC	P9U901405UC	P9U901438UC	P9U901457UC
0/100 psi/kPa	P9U901420UC	**P9U901406UC**	**P9U901407UC**	P9U901439UC	P9U901458UC
0/160 psi/kPa	P9U901421UC	**P9U901408UC**	P9U901409UC	**P9U901440UC**	P9U901459UC
0/200 psi/kPa	P9U901422UC	**P9U901426UC**	P9U901410UC	P9U901441UC	P9U901460UC
0/300 psi/kPa	P9U901423UC	P9U901427UC	P9U901411UC	P9U901442UC	P9U901461UC
0/400 psi/kPa	P9U901443UC	P9U901445UC	P9U901447UC	P9U901453UC	**P9U901462UC**
0/600 psi/kPa	P9U901444UC	P9U901446UC	P9U901448UC	P9U901454UC	P9U901463UC

Other ranges and connection sizes available upon request. For scale change, refer to How to Order Guide for scale codes.

1.5” Back Connection with U-Clamp

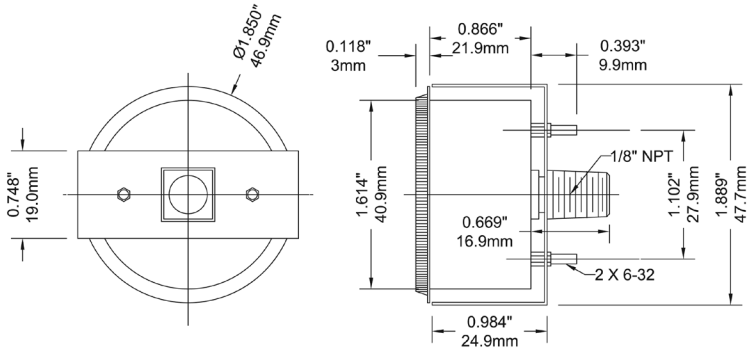

2” Back Connection with U-Clamp

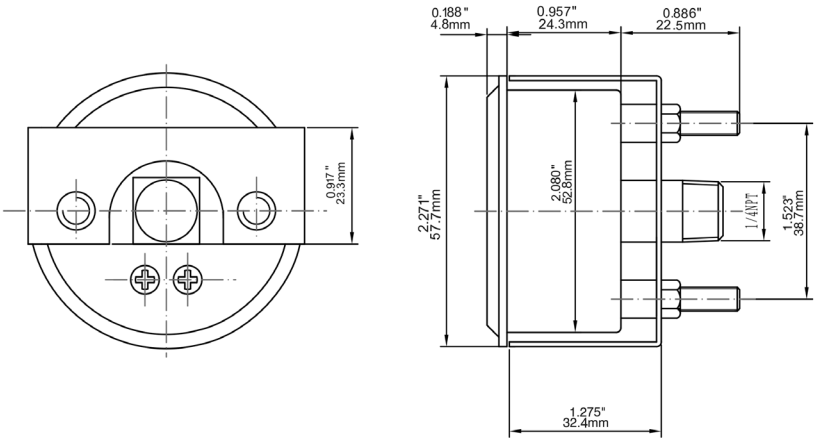

2.5” Back Connection with U-Clamp

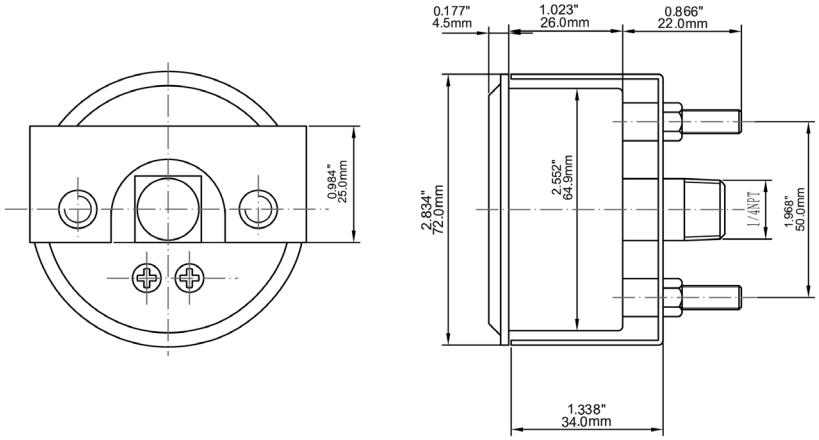

3.5” Back Connection with U-Clamp

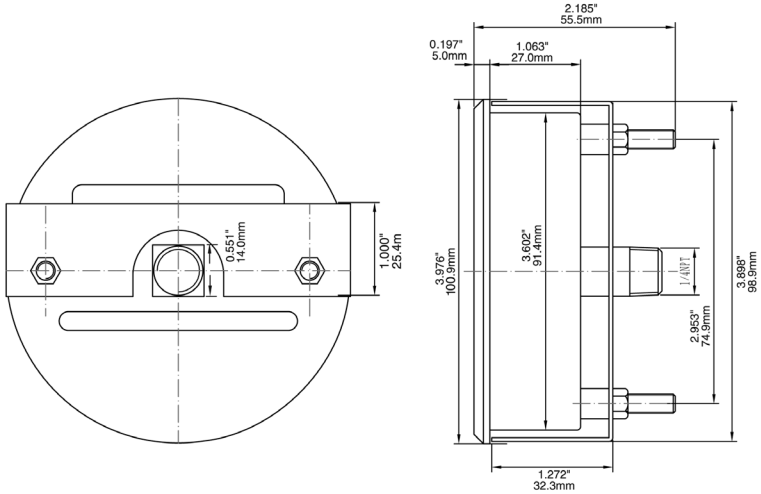

PEM, PEM-LF

Economy Gauge, Lead Free Economy Gauge

Description & Features:

- Most economical, all-purpose pressure gauge
- 1.5” (40mm) to 4” (100mm) sizes
- Friction bezel rings
- Black steel case
- Brass or lead free brass wetted parts
- ±3-2-3% accuracy
- ASME B40.100 compliant (EN837-1 available)
- CRN registered
- Lead free version NSF-61-372 certified
- 5 year warranty

Applications:

- General purpose gauge for plumbing, heating, air conditioning, pneumatic, hydraulic, water tanks, air compressors, OEM
- Lead free version for potable water systems
- Suitable for non-clogging and non-corroding media

Specifications	
Dial	1.5” (40mm), 2” (50mm), 2.5” (63mm), 4” (100mm) white aluminum with black and red markings
Case	Steel, painted black (plastic available)
Lens	1.5” (40mm), 2” (50mm), 2.5” (63mm): Acrylic 4” (100mm): Glass
Ring	1.5” (40mm), 2” (50mm): Steel, painted black 2.5” (63mm), 4” (100mm): Steel, chrome plated
Socket	PEM: Brass PEM-LF: Lead free brass, NSF-61-372 certified
Connection	1/8” NPT or 1/4” NPT standard
Bourdon Tube	PEM: Phosphor bronze PEM-LF: Lead free phosphor bronze, NSF-61-372 certified
Movement	PEM: Brass PEM-LF (1.5”, 2”, 2.5”): SS, PEM-LF (4”): Lead free brass, NSF-61-372 certified
Pointer	Aluminum, black
Welding	Silver alloy
Over-pressure Limit	25% of full scale value
Working Pressure	Maximum 75% of full scale value
Ambient/Process Temperature	-40°F to 150°F (-40°C to 65°C)
Accuracy	±3-2-3% ANSI/ASME Grade B
Enclosure Rating	IP52
Warning	⚠ **WARNING:** This product can expose you to chemicals including lead, which is known to the State of California to cause cancer and birth defects or other reproductive harm. For more information go to www.P65Warnings.ca.gov.

PEM Order Codes (products in bold are normally stock in North America)

Dial Size	1.5" (40mm)		2" (50mm)					2.5" (63mm)		4" (100mm)
Connection	1/8" Bottom	1/8" Back (CB)	1/8" Bottom	1/8" Back (CB)	1/4" Bottom	1/4" Back (CB)	1/4" psi only Bottom	1/4" Bottom	1/4" Back (CB)	1/4" Bottom
Case Material	Steel						Plastic	Steel		
30" Hg Vac/kPa	PEM1297	**PEM1397**	**PEM195**	PEM1424	**PEM135**	**PEM1428**	PEM1398	**PEM210**	**PEM1431**	**PEM220**
30"/0/15 psi/kPa	-	-	-	-	-	-	-	**PEM152**	-	-
30"/0/30 psi/kPa	-	-	-	-	-	-	-	**PEM153**	-	-
30"/0/60 psi/kPa	-	-	-	-	-	-	-	**PEM154**	-	-
30"/0/100 psi/kPa	-	-	-	-	-	-	-	PEM155	-	-
0/15 psi/kPa	**PEM1299**	**PEM1399**	**PEM196**	**PEM1425**	**PEM136**	**PEM1429**	-	**PEM211**	**PEM1436**	PEM295
0/30 psi/kPa	**PEM1300**	**PEM1400**	**PEM206**	**PEM1402**	**PEM199**	**PEM1403**	**PEM200**	**PEM212**	**PEM1437**	**PEM221**
0/60 psi/kPa	**PEM1301**	**PEM1401**	**PEM207**	**PEM1404**	**PEM201**	**PEM1405**	**PEM194**	**PEM213**	**PEM1438**	**PEM222**
0/100 psi/kPa	**PEM1320**	**PEM1420**	**PEM208**	**PEM1406**	**PEM202**	**PEM1407**	-	**PEM214**	**PEM1439**	**PEM223**
0/160 psi/kPa	**PEM1321**	**PEM1421**	**PEM197**	**PEM1408**	**PEM203**	**PEM1409**	-	**PEM215**	**PEM1440**	**PEM224**
0/200 psi/kPa	PEM1322	**PEM1422**	**PEM209**	**PEM1426**	**PEM204**	**PEM1410**	-	**PEM216**	**PEM1441**	**PEM225**
0/300 psi/kPa	PEM1323	PEM1423	**PEM198**	PEM1427	**PEM205**	**PEM1411**	-	**PEM217**	PEM1442	**PEM226**
0/400 psi/kPa	-	-	-	-	-	PEM1414	-	**PEM219**	PEM3412	PEM227
0/600 psi/kPa	-	-	-	-	-	PEM1412	-	**PEM218**	PEM3413	-
0/1,000 psi/kPa	-	-	-	-	-	-	-	**PEM290**	-	-
0/3,000 psi/kPa	-	-	-	-	-	-	-	**PEM291**	-	-
0/5,000 psi/kPa	-	-	-	-	-	-	-	**PEM292**	-	-

PEM-LF Order Codes (products in bold are normally stock in North America)

Dial Size	1.5" (40mm)		2" (50mm)				2.5" (63mm)		4" (100mm)
Connection	1/8" Bottom	1/8" Back (CB)	1/8" Bottom	1/8" Back (CB)	1/4" Bottom	1/4" Back (CB)	1/4" Bottom	1/4" Back (CB)	1/4" Bottom
Case Material	Steel						Steel		
30" Hg Vac/kPa	**PEM1297LF**	**PEM1397LF**	**PEM195LF**	**PEM1424LF**	**PEM135LF**	**PEM1428LF**	**PEM210LF**	**PEM1431LF**	**PEM220LF**
30"/0/15 psi/kPa	-	-	-	-	-	-	PEM152LF	-	-
30"/0/30 psi/kPa	-	-	-	-	-	-	PEM153LF	-	-
30"/0/60 psi/kPa	-	-	-	-	-	-	PEM154LF	-	-
30"/0/100 psi/kPa	-	-	-	-	-	-	PEM155LF	-	-
0/15 psi/kPa	**PEM1299LF**	**PEM1399LF**	**PEM196LF**	**PEM1425LF**	**PEM136LF**	**PEM1429LF**	**PEM211LF**	**PEM1436LF**	-
0/30 psi/kPa	**PEM1300LF**	**PEM1400LF**	**PEM206LF**	PEM1402LF	**PEM199LF**	**PEM1403LF**	**PEM212LF**	PEM1437LF	**PEM221LF**
0/60 psi/kPa	PEM1301LF	**PEM1401LF**	PEM207LF	**PEM1404LF**	**PEM201LF**	**PEM1405LF**	**PEM213LF**	**PEM1438LF**	**PEM222LF**
0/100 psi/kPa	**PEM1320LF**	**PEM1420LF**	**PEM208LF**	**PEM1406LF**	**PEM202LF**	**PEM1407LF**	**PEM214LF**	**PEM1439LF**	**PEM223LF**
0/160 psi/kPa	**PEM1321LF**	**PEM1421LF**	**PEM197LF**	**PEM1408LF**	**PEM203LF**	**PEM1409LF**	**PEM215LF**	**PEM1440LF**	**PEM224LF**
0/200 psi/kPa	**PEM1322LF**	**PEM1422LF**	PEM209LF	**PEM1426LF**	**PEM204LF**	**PEM1410LF**	**PEM216LF**	PEM1441LF	**PEM225LF**
0/300 psi/kPa	**PEM1323LF**	**PEM1423LF**	**PEM198LF**	PEM1427LF	**PEM205LF**	PEM1411LF	**PEM217LF**	PEM1442LF	**PEM226LF**
0/400 psi/kPa	-	-	-	-	-	-	**PEM219LF**	-	PEM227LF
0/600 psi/kPa	-	-	-	-	-	-	**PEM218LF**	PEM3413LF	-
0/1,000 psi/kPa	-	-	-	-	-	-	**PEM290LF**	-	-
0/3,000 psi/kPa	-	-	-	-	-	-	PEM291LF	-	-
0/5,000 psi/kPa	-	-	-	-	-	-	PEM292LF	-	-

Other ranges and connection sizes available upon request. For scale change, refer to How to Order Guide for scale codes.
For options, attach suffix to end of order code: i.e. PEM1399-GL15 for 1.5" GLASS LENS.

Option suffix:
ECASE15SSBK = 1.5" (40mm) SS back case connection
ECASE15SSBTM = 1.5" (40mm) SS bottom connection
ECASE20SSBK = 2" (50mm) SS case back connection
ECASE20SSBTM = 2" (50mm) SS case bottom connection
EN = EN837-1 compliant
GL15 = Glass lens for 1.5" (40mm) dial
GL2 = Glass lens for 2" (50mm) dial
GL25 = Glass lens for 2.5" (63mm) dial

Note: For 1.5" to 2" SS internals, please see PRL Series Regulator Gauges.

1.5” Bottom Connection

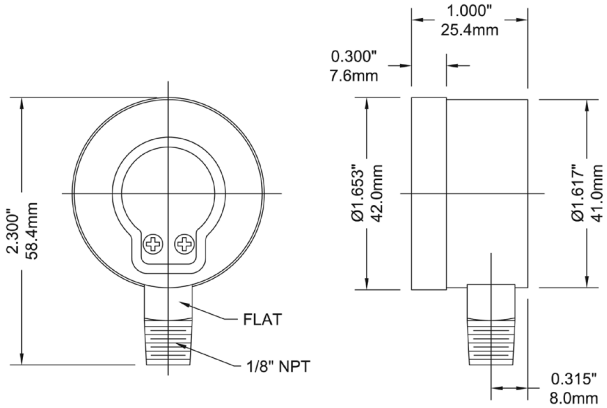

1.5” Back Connection

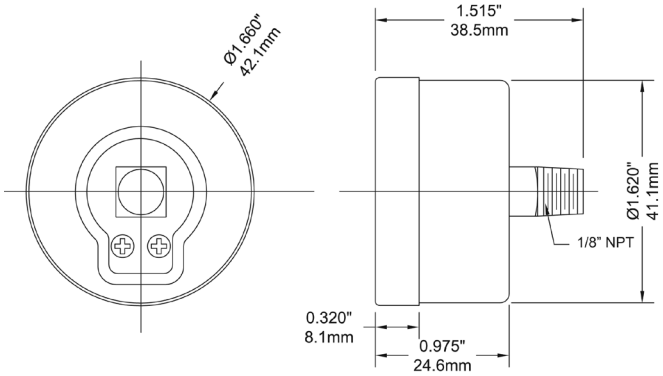

2” Bottom Connection

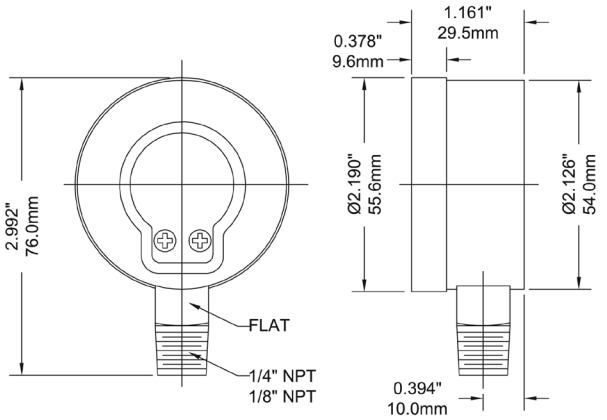

2” Back Connection

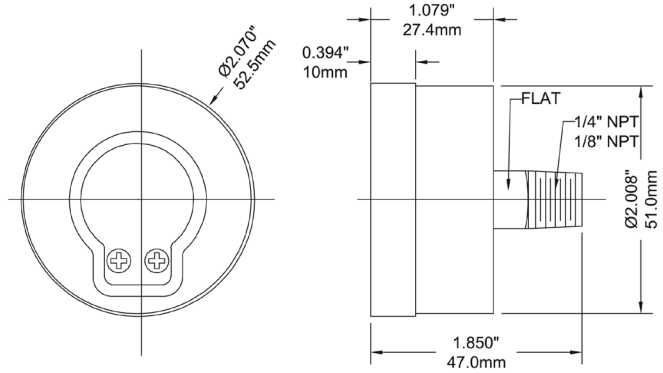

2.5” Bottom Connection

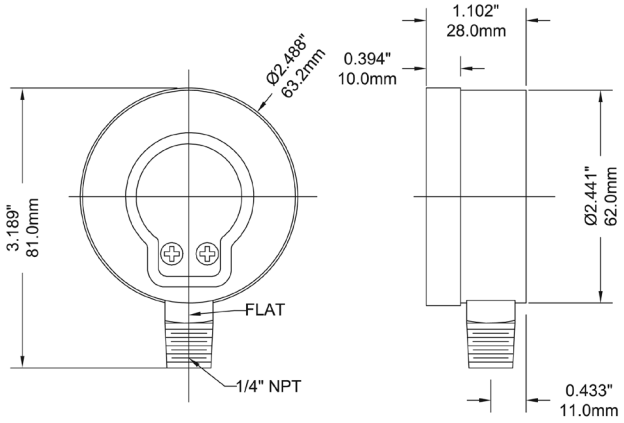

2.5” Back Connection

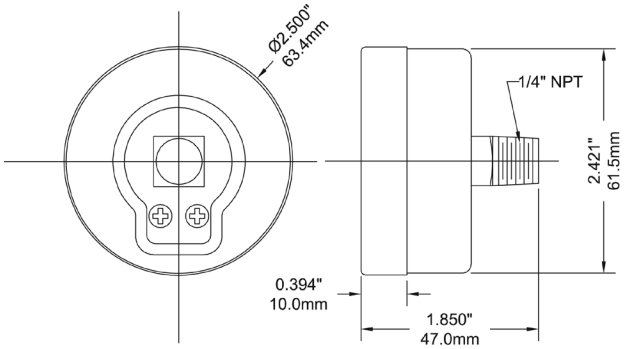

4” Bottom Connection

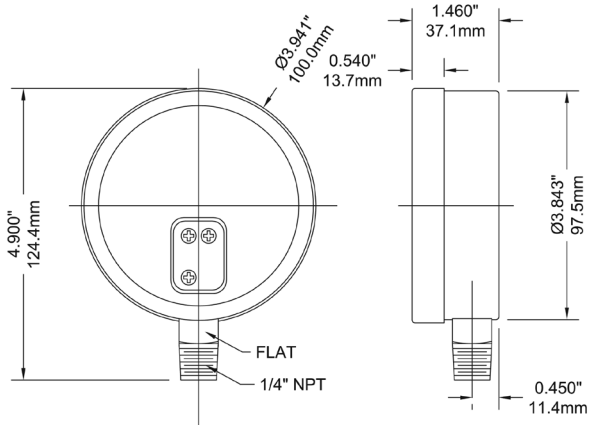

Description & Features:

- Most economical pressure gauge used for panels
- 1.5” (40mm) to 2.5” (63mm) dial sizes
- Black steel case
- Brass wetted parts
- Stainless steel crimp-on bezel
- Stud-style U-Clamp design for secure panel mounting
- ±3-2-3% accuracy
- Dual scale (psi/kPa)
- ASME B40.100 compliant
- CRN registered
- 5 year warranty

Applications:

- For measuring gases, air, water and oils when equipment or processes require an economical panel mounted gauge
- Suitable for non-clogging, non-corrossive media

Specifications	
Dial	1.5” (40mm), 2” (50mm), 2.5” (63mm) white aluminum with black and red markings
Case	Steel, painted black
Lens	Acrylic
Ring	SS
Socket	Brass
Connection	1/8” NPT or 1/4” NPT standard
Bourdon Tube	Phosphor bronze
Movement	Brass
Pointer	Aluminum, black
Welding	Silver alloy
Over-pressure Limit	25% of full scale value
Working Pressure	Maximum 75% of full scale value
Ambient/Process Temperature	-40°F to 150°F (-40°C to 65°C)
Accuracy	±3-2-3% ANSI/ASME Grade B
Enclosure Rating	IP52
Warning	⚠ **WARNING:** This product can expose you to chemicals including lead, which is known to the State of California to cause cancer and birth defects or other reproductive harm. For more information go to www.P65Warnings.ca.gov.

Order Codes (products in bold are normally stock in North America)

Dial Size	1.5” (40mm)	2” (50mm)	2” (50mm)	2.5” (63mm)
Connection	**1/8”**	**1/8”**	**1/4”**	**1/4”**
30” Hg Vac/kPa	**PEU1399UC**	PEU1396UC	PEU1428UC	PEU1431UC
0/15 psi/kPa	**PEU1398UC**	PEU1397UC	PEU1429UC	PEU1436UC
0/30 psi/kPa	**PEU1400UC**	PEU1402UC	**PEU1403UC**	PEU1437UC
0/60 psi/kPa	**PEU1401UC**	**PEU1404UC**	PEU1405UC	PEU1438UC
0/100 psi/kPa	**PEU1420UC**	**PEU1406UC**	PEU1407UC	**PEU1439UC**
0/160 psi/kPa	**PEU1421UC**	**PEU1408UC**	**PEU1409UC**	**PEU1440UC**
0/200 psi/kPa	PEU1422UC	PEU1412UC	PEU1410UC	PEU1441UC
0/300 psi/kPa	PEU1423UC	PEU1413UC	PEU1411UC	PEU1442UC

Other ranges and connection sizes available upon request. For scale change, refer to How to Order Guide for scale codes.

1.5” Panel Mounted

Panel cut-out

1.63”(42mm)

Outer diameter

1.84”(47mm)

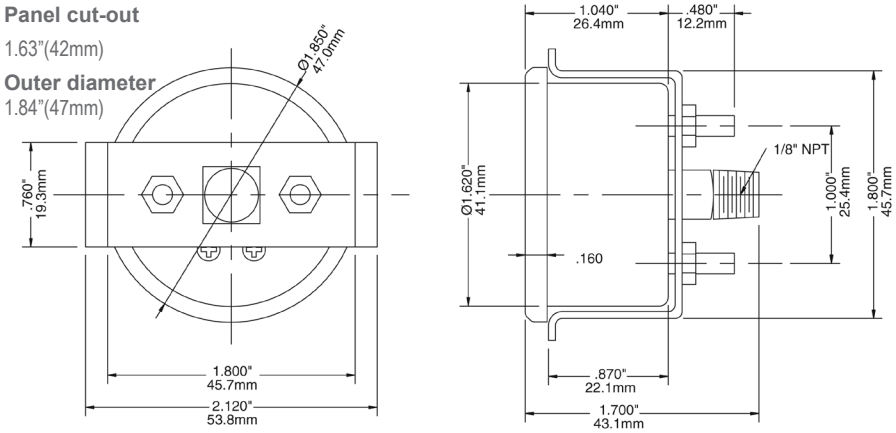

2” Panel Mounted

Panel cut-out

2.12”(54mm)

Outer diameter

2.29”(58mm)

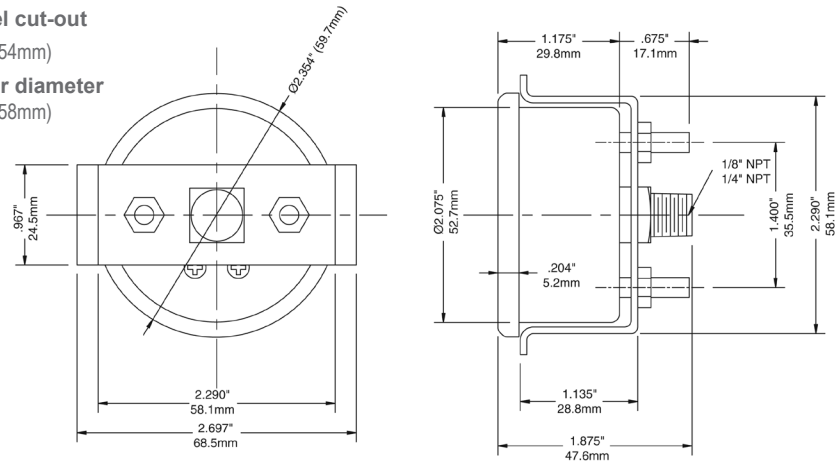

2.5” Panel Mounted

Panel cut-out

2.44”(62mm)

Outer diameter

2.65”(67mm)

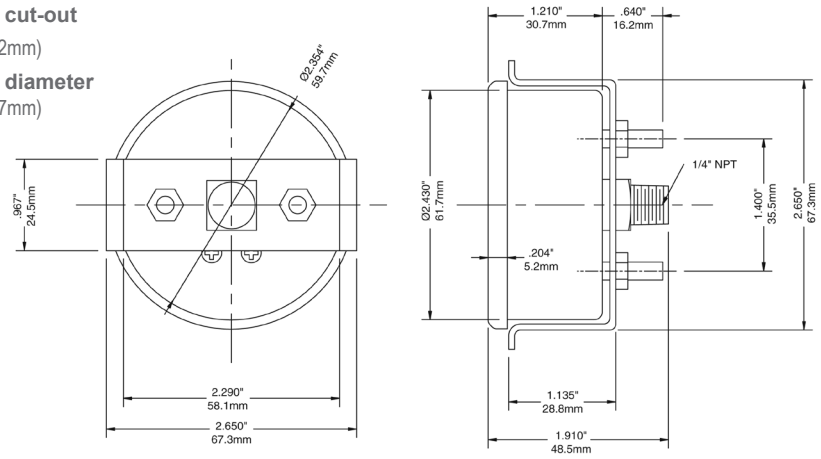

Description & Features:

- Brass or stainless steel wetted parts
- Both conventional and balanced scale available
- ASME B40.100 compliant
- CRN registered
- 5 year warranty

Applications:

- Single pointer to show difference from two pressure sources
- Typically used to measure pressure drops across a filter, pump or other equipment

Specifications	
Dial	4.5” (115mm), 6” (150mm) white aluminum with black markings
Case	Aluminum, painted black
Front Flange	SS
Back Flange	Black steel
Lens	Glass
Ring	4.5” (115mm): SS 6“ (150mm): Aluminum
Socket	Brass or 316 SS
Connections	1/4” NPT standard
Scale	PSID only
Bourdon Tubes	Phosphor bronze or AISI 316 SS, independent, matched
Movement	Brass
Pointer	Aluminum (micrometer)
Welding	Tin/copper alloy for brass internals, TIG argonarc for SS internals
Over-pressure Limit	30% of full scale value
Working Pressure	Maximum 75% of full scale value
Ambient/Process Temperature	-40°F to 150°F (-40°C to 65°C)
Accuracy	±1% ANSI/ASME Grade 1A
Warning (brass internals only)	⚠ **WARNING:** This product can expose you to chemicals including lead, which is known to the State of California to cause cancer and birth defects or other reproductive harm. For more information go to www.P65Warnings.ca.gov.

Order Codes

Dial Size	Max. Static Pressure	4.5" (115mm)				6" (150mm)			
Connection		1/4" Bottom	1/4" Back (LB)	1/4" Bottom	1/4" Back (LB)	1/4" Bottom	1/4" Back (LB)	1/4" Bottom	1/4" Back (LB)
Socket, Tube		Brass		SS		Brass		SS	
0/15 psi	22 psi	PDT8051	PDT8051B	PDT8061	PDT8061B	PDT8071	PDT8071B	PDT8081	PDT8081B
0/30 psi	45 psi	PDT8052	PDT8052B	PDT8062	PDT8062B	PDT8072	PDT8072B	PDT8082	PDT8082B
0/60 psi	90 psi	PDT8053	PDT8053B	PDT8063	PDT8063B	PDT8073	PDT8073B	PDT8083	PDT8083B
0/100 psi	150 psi	PDT8054	PDT8054B	PDT8064	PDT8064B	PDT8074	PDT8074B	PDT8084	PDT8084B
0/160 psi	240 psi	PDT8055	PDT8055B	PDT8065	PDT8065B	PDT8075	PDT8075B	PDT8085	PDT8085B
0/200 psi	300 psi	PDT8056	PDT8056B	PDT8066	PDT8066B	PDT8076	PDT8076B	PDT8086	PDT8086B
0/300 psi	450 psi	PDT8057	PDT8057B	PDT8067	PDT8067B	PDT8077	PDT8077B	PDT8087	PDT8087B
0/600 psi	900 psi	PDT8058	PDT8058B	PDT8068	PDT8068B	PDT8078	PDT8078B	PDT8088	PDT8088B

Other ranges and connection sizes available upon request. For scale change, refer to How to Order Guide for scale codes. Bi-directional or zero positioned at 12 o'clock on dial is available. Low Differential Pressure/High Static Pressure gauges are also available (PPD, PRD, PSD and PVD Series').

4.5" Bottom Connection

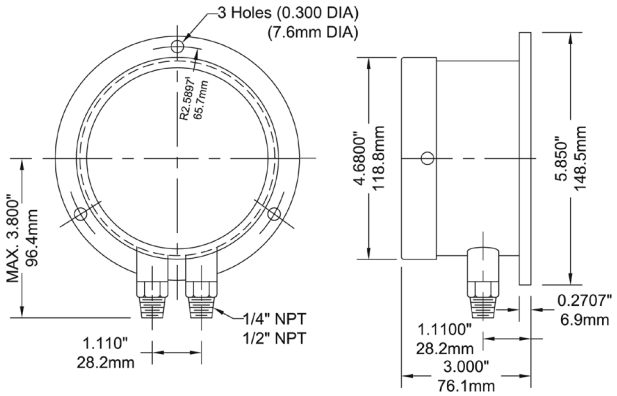

4.5" Back Connection

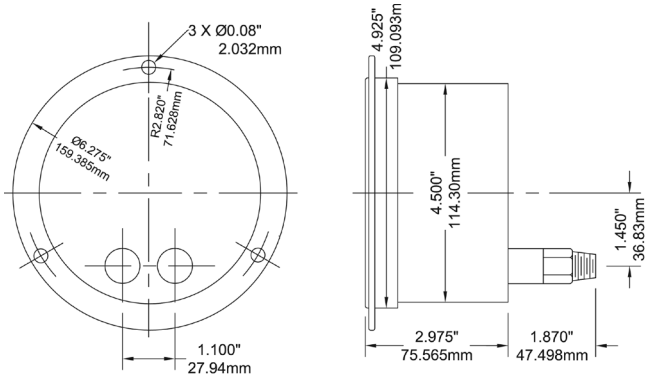

6" Bottom Connection

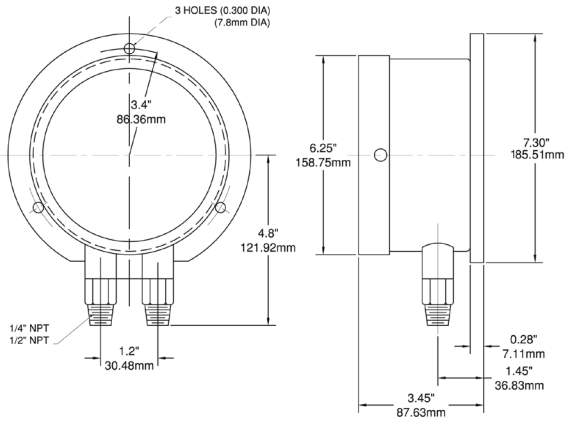

6" Back Connection

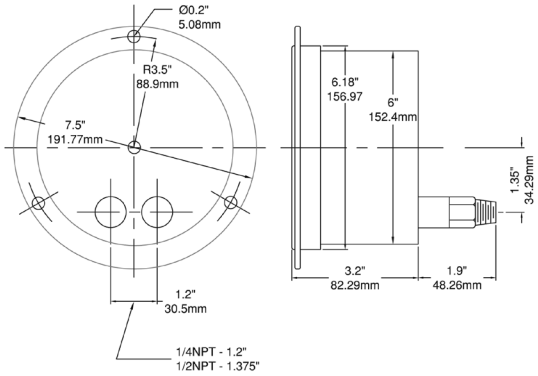

Description & Features:

- Heavy duty, highly accurate, aluminum case
- Brass and stainless steel wetted parts available
- Two separate bourdon tubes and pointers
- One red and one black pointer
- ASME B40.100 compliant
- CRN registered
- 5 year warranty

Applications:

- Comparing two separate process pressures on the same gauge
- Utilized on pump and filter installations

Specifications	Stainless Steel	Brass
Dial	4.5” (115mm), 6” (150mm) white aluminum with black markings	4.5” (115mm), 6” (150mm) white aluminum with black markings
Case	Aluminum, painted black	Aluminum, painted black
Front Flange	SS	SS
Back Flange	Black steel	Black steel
Lens	Glass	Glass
Ring	4.5” (115mm): SS 6” (150mm): Aluminum	4.5” (115mm): SS 6” (150mm): Aluminum
Socket	316 SS	Brass
Connections	1/4” NPT standard	1/4” NPT standard
Scale	PSI only	PSI only
Bourdon Tubes	AISI 316 SS, independent, matched	Phosphor bronze, independent, matched
Movement	Brass	Brass
Pointer	Aluminum, micrometer	Aluminum, micrometer
Welding	TIG argonarc	Tin/copper alloy
Over-pressure Limit	30% of full scale value	30% of full scale value
Working Pressure	Maximum 75% of full scale value	Maximum 75% of full scale value
Ambient/Process Temperature	-40°F to 150°F (-40°C to 65°C)	-40°F to 150°F (-40°C to 65°C)
Accuracy	±1% ANSI/ASME Grade 1A	±1% ANSI/ASME Grade 1A
Warning (brass internals only)	N/A	⚠ **WARNING:** This product can expose you to chemicals including lead, which is known to the State of California to cause cancer and birth defects or other reproductive harm. For more information go to www.P65Warnings.ca.gov.

Order Codes

Dial Size	4.5” (115mm)				6” (150mm)			
Connection	1/4” Bottom	1/4” Back (LB)	1/4” Bottom	1/4” Back (LB)	1/4” Bottom	1/4” Back (LB)	1/4” Bottom	1/4” Back (LB)
Socket, Tube	Brass		SS		Brass		SS	
0/15 psi	PDX8011	PDX8011B	PDX8021	PDX8021B	PDX8091	PDX8091B	PDX8101	PDX8101B
0/30 psi	PDX8012	PDX8012B	PDX8022	PDX8022B	PDX8092	PDX8092B	PDX8102	PDX8102B
0/60 psi	PDX8013	PDX8013B	PDX8023	PDX8023B	PDX8093	PDX8093B	PDX8103	PDX8103B
0/100 psi	PDX8014	PDX8014B	PDX8024	PDX8024B	PDX8094	PDX8094B	PDX8104	PDX8104B
0/160 psi	PDX8015	PDX8015B	PDX8025	PDX8025B	PDX8095	PDX8095B	PDX8105	PDX8105B
0/200 psi	PDX8016	PDX8016B	PDX8026	PDX8026B	PDX8096	PDX8096B	PDX8106	PDX8106B
0/300 psi	PDX8017	PDX8017B	PDX8027	PDX8027B	PDX8097	PDX8097B	PDX8107	PDX8107B
0/600 psi	PDX8018	PDX8018B	PDX8028	PDX8028B	PDX8098	PDX8098B	PDX8109	PDX8109B

Other ranges and connection sizes available upon request. For scale change, refer to How to Order Guide for scale codes.

4.5” Bottom Connection

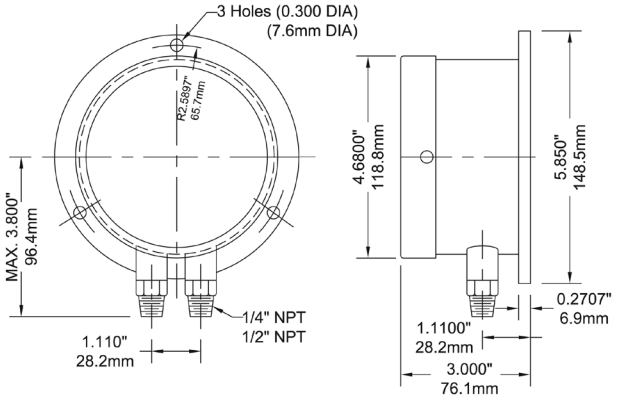

4.5” Back Connection

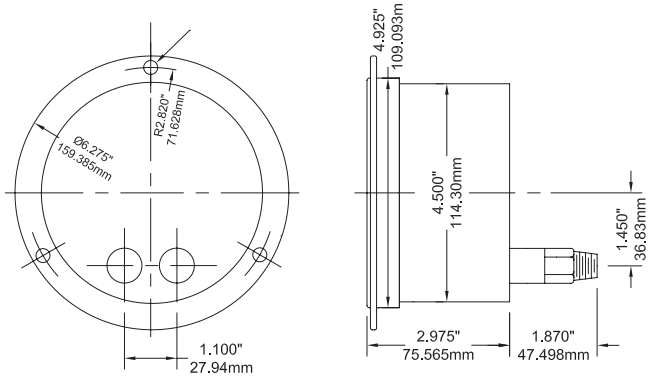

Description & Features:

- Resistance-free differential gauge for all air and non-corrosive gas installations
- Industrial grade die-cast aluminum case
- Extreme temperature tolerance with o-ring seal
- Easily accessible re-zero adjustment screw
- 2% full scale accuracy*
- 3 mounting adapters with screws included, other mounting accessories also available
- 5 year warranty

Applications:

- Low pressure and differential monitoring for air and non-combustible gases including filters, blowers, vacuums, air handlers and clean rooms

Specifications	
Dial	4” (100mm), white aluminum with black markings
Case	Die-cast black aluminum
Lens	Polycarbonate
Ring	Threaded die-cast black aluminum
Connection	1/8” NPTF high & low pressure taps, side & back
Movement	Resistance-free and magnetic
Pointer	Aluminum, anodized black
Over-pressure Limit	Maximum pressure of 14.5 psi / 100 kPa
Ambient/Process Temperature	-40°F to 140°F (-40°C to 60°C) 14°F to 140°F (-10°C to 60°C)
Accuracy	±2% of full scale value*
Enclosure Rating	IP67
Warning	⚠ **WARNING:** This product can expose you to chemicals including lead, which is known to the State of California to cause cancer and birth defects or other reproductive harm. For more information go to www.P65Warnings.ca.gov.

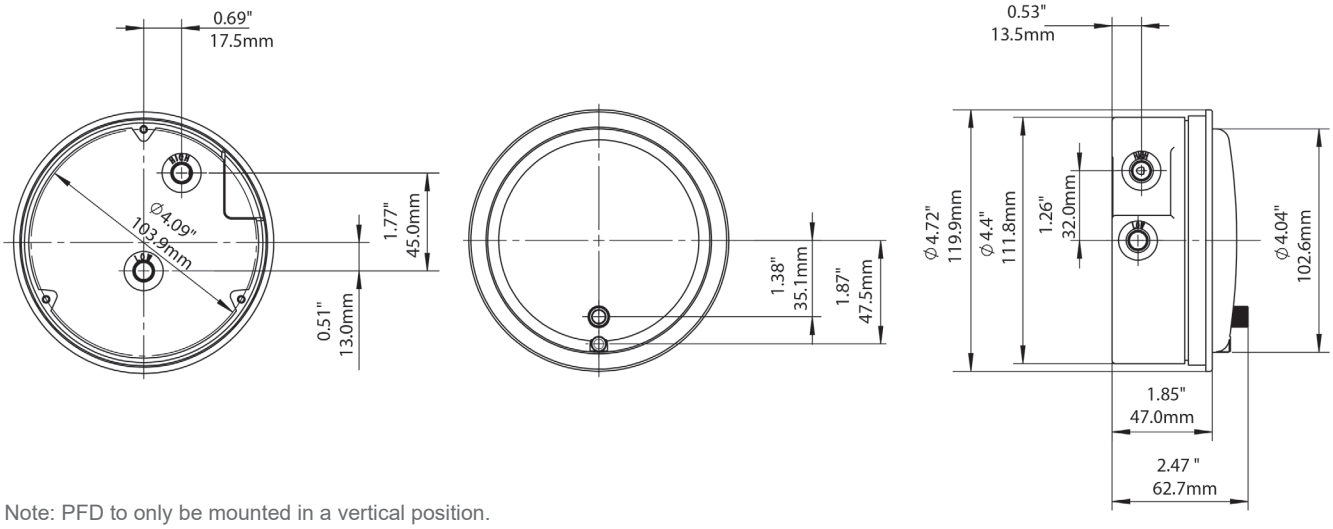

Note: PFD to only be mounted in a vertical position.

* Unless otherwise noted.

"H2O Order Codes (products in bold are normally stock in North America)

Dial Size	4" (100mm)
Connection	1/8" Side & Back
Case Material	Aluminum
-0.25/0/0.25 "H2O	**PFD40100▪**
-0.5/0/0.5 "H2O	**PFD40101**
-1/0/1 "H2O	**PFD40102**
-2/0/2 "H2O	PFD40103
-5/0/5 "H2O	PFD40104
-10/0/10 "H2O	**PFD40105**
-15/0/15 "H2O	**PFD40106**
0/0.25 "H2O	**PFD40010▲**
0/0.5 "H2O	PFD40011▪
0/1 "H2O	**PFD40012**
0/2 "H2O	**PFD40013**
0/3 "H2O	**PFD40014**
0/4 "H2O	PFD40015
0/5 "H2O	**PFD40016**
0/6 "H2O	PFD40017
0/8 "H2O	PFD40018
0/10 "H2O	**PFD40019**
0/12 "H2O	PFD40020
0/15 "H2O	**PFD40021**
0/20 "H2O	**PFD40022**
0/25 "H2O	**PFD40023**
0/30 "H2O	**PFD40024**
0/40 "H2O	**PFD40025**
0/50 "H2O	**PFD40026**
0/60 "H2O	PFD40027
0/80 "H2O	PFD40028
0/100 "H2O	**PFD40029**
0/120 "H2O	PFD40030
0/150 "H2O	**PFD40031**

Note: Max. pressure rating is 14.5 psi

mmH2O Order Codes

Dial Size	4" (100mm)
Connection	1/8" Side & Back
Case Material	Aluminum
-3/0/3 mmH2O	PFD40350▲
-5/0/5 mmH2O	PFD40351▪
-10/0/10 mmH2O	PFD40352
0/6 mmH2O	PFD40300▲
0/10 mmH2O	PFD40301▪
0/15 mmH2O	PFD40302
0/20 mmH2O	PFD40303
0/25 mmH2O	PFD40304
0/30 mmH2O	PFD40305
0/50 mmH2O	PFD40306
0/80 mmH2O	PFD40307
0/100 mmH2O	PFD40308
0/125 mmH2O	PFD40309
0/150 mmH2O	PFD40310
0/200 mmH2O	PFD40311
0/250 mmH2O	PFD40312
0/300 mmH2O	PFD40313

kPa Order Codes

Dial Size	4" (100mm)
Connection	1/8" Side & Back
Case Material	Aluminum
0/0.5 kPa	PFD40500
0/1 kPa	PFD40501
0/1.5 kPa	PFD40502
0/2 kPa	PFD40503
0/2.5 kPa	PFD40504
0/3 kPa	PFD40505
0/4 kPa	PFD40506
0/5 kPa	PFD40507
0/6 kPa	PFD40508
0/8 kPa	PFD40509
0/10 kPa	PFD40510
0/15 kPa	PFD40511
0/20 kPa	PFD40512
0/25 kPa	PFD40513
0/30 kPa	PFD40514

RSP - Setpoint indicator

PSI Order Codes (products in bold are normally stock in North America)

Dial Size	4" (100mm)
Connection	1/8" Side & Back
Case Material	Aluminum
0/1 psi	**PFD40150**
0/2 psi	**PFD40151**
0/3 psi	PFD40152
0/4 psi	PFD40153
0/5 psi	**PFD40154**

PA Order Codes (products in bold are normally stock in North America)

Dial Size	4" (100mm)
Connection	1/8" Side & Back
Case Material	Aluminum
-50/0/50 PA	PFD40200▲
-60/0/60 PA	PFD40201▲
-100/0/100 PA	PFD40202▪
-125/0/125 PA	PFD40403▪
-150/0/150 PA	PFD40404
-200/0/200 PA	PFD40405
-250/0/250 PA	PFD40406
-300/0/300 PA	PFD40407
-500/0/500 PA	PFD40408
0/50 PA	**PFD40210**
0/60 PA	PFD40211
0/100 PA	**PFD40212**
0/125 PA	PFD40213
0/150 PA	PFD40214
0/200 PA	PFD40215
0/250 PA	**PFD40216**
0/300 PA	PFD40217
0/500 PA	PFD40218
0/750 PA	PFD40219
0/1,000 PA	PFD40220

Other ranges and connection sizes available upon request. For scale change, refer to How to Order Guide for scale codes.

For options, attach suffix to end of order code: i.e. PFD40031-RSP for SETPOINT INDICATOR. Contact Winters for additional options

Option suffix:

RSP = Setpoint indicator (IP54 rated)

▪ ±3% of full scale value accuracy
▲ ±4% of full scale value accuracy

Options Order Codes

Description	Code
Hanging Bracket	**PFD1001**
Surface Mounting Bracket	**PFD1002**
3-Way Valve	**PFD1003**
Flush Mounting Bracket	**PFD1004**
Air Filter Kit	**PFD1005**
2" Pipe Mounting Kit	**PFD1006**
Flange for Panel Mounting	**PFD1007**
Square Flush Mount Kit	**PFD1008**

High Static Pressure Differential Gauges

PPD, PRD PSD, PVD

Description & Features:

- Versatile high static low differential pressure gauges
- Four types of sensing elements for a large variety of ranges
- Switches available for actuation
- ASME B40.100 compliant
- IP65 enclosure rating
- 5 year warranty

Applications:

- Used for filtration systems, low pressure gas installations and for leak detection in low pressure, high static systems

Specifications	Piston Gauge (PPD)	Rolling Diaphragm Gauge (PRD)	Small Convoluted Diaphragm Gauge (PSD)	Convoluted Diaphragm Gauge (PVD)
Dial	2.5” (63mm), 3.5” (90mm), 4.5” (115mm)	2.5” (63mm)	2.5” (63mm), 3.5” (90mm), 4.5” (115mm)	3.5” (90mm), 4.5” (115mm)
Case	Aluminum or engineered plastic	Engineered plastic	Aluminum or engineered plastic	Aluminum or engineered plastic
Lens	Shatter resistant acrylic (standard), safety glass (optional)	Shatter resistant acrylic (standard), safety glass (optional)	Shatter resistant acrylic (standard), safety glass (optional)	Shatter resistant acrylic (standard), safety glass (optional)
Line Connection Locations	In-line, back or bottom	In-line (only)	In-line, back, dual top & bottom or bottom	Dual top & bottom
Connections	1/4” NPTF (standard), 1/2” NPTF, 7/16”-20 SAE	1/4” NPTF (only)	1/4” NPTF (standard), 1/2” NPTF, 7/16”-20 SAE	Dual 1/4” NPTF
Wetted Parts Materials	SS piston with ceramic magnet (standard), Aluminum, Bronze or Monel® piston (optional)	SS parts with Buna N seals	SS parts with Buna N seals	SS parts with Buna N seals (standard), Hastelloy® C parts with Buna N seals (optional)
Body Material	SS, aluminum, bronze or Monel®	SS, aluminum or acetal	SS, aluminum or brass	SS, aluminum, brass, engineered plastic or Hastelloy® C
Internals/Movement	Magnetic coupling using piston & spring	Magnetic coupling with rolling diaphragm sensor	Magnetic coupling with convoluted diaphragm sensor	Magnetic coupling with convoluted diaphragm sensor
Migration of Media	Marginal	Zero	Zero	Zero
Seal	Buna N (standard), PTFE, FKM, neoprene	Buna N (standard), FKM	Buna N (standard), FKM, silicone, neoprene	Buna N (standard), FKM, silicone, neoprene
Standard Differential Ranges	0-5 thru 110 psid (0.4-8 bar)	0-5 thru 50 psid (0.4-3 bar)	0-25 thru 100 psid (1.5-7 bar)	0-5 thru 400” H_2O (12.4 mbar-1 bar)
Maximum System Pressure	Aluminum: 3,000 psi (200 bar) Bronze, Monel®: 5,000 psi (350 bar) SS: 6,000 psi (400 bar)	Aluminum, SS: 1,000 psi (70 bar) Acetal: 500 psi (35 bar)	Aluminum, SS: 3,000 psi (200 bar) Brass: 1,500 psi (100 bar)	Aluminum, brass, SS: 500 psi (35 bar) Engineered plastic: 300 psi (20 bar) Hastelloy® C: 500 psi (35 bar)
Ambient Temperature	-40°F to 200°F (-40°C to 93°C)	-40°F to 200°F (-40°C to 93°C)	-40°F to 200°F (-40°C to 93°C)	-40°F to 200°F (-40°C to 93°C)
Accuracy	±2% of full scale value	±5% of full scale value	±2% of full scale value	0-5 thru 9.9” H_2O: ±5% of full scale 0-10 thru 400” H_2O: ±2% of full scale
Warning (brass internals only)	N/A	N/A	⚠ **WARNING:** This product can expose you to chemicals including lead, which is known to the State of California to cause cancer and birth defects or other reproductive harm. For more information go to www.P65Warnings.ca.gov.	

Hastelloy® is a registered trademark of Haynes International, Inc.
Monel® is a registered trademark of Inco Alloys International

High Static Pressure Differential Gauges

Piston Type (PPD)

- Most suitable for general purpose applications including filters, pumps and chillers. Uses a piston as a sensor to separate high & low pressure in response to pressure differentiation.
- Standard Differential Range: 0/5 thru 110 psid (0.4/8 bar)
- Maximum System Pressure Aluminum: 3,000 psi (200 bar)
- Maximum System Pressure Bronze, Monel®: 3,000 psi (200 bar)
- Maximum System Pressure SS: 6,000 psi (400 bar)
- Accuracy ±2% full scale ascending

Rolling Diaphragm Gauge (PRD)

- Operates on rolling diaphragm as a sensor, which assures complete separation of the high and low pressure ports. Suitable for use on dissimilar fluids, wet gas and process fluids with particulates present. Used in high line pressure and differential pressure ranges up to 50 psid.
- Standard Differential Range: 0/5 thru 50 psid (0.4/3 bar)
- Maximum System Pressure Aluminum, SS: 1,000 psi (70 bar)
- Maximum System Pressure Acetal: 500 psi (35 bar)
- Accuracy ±5% full scale ascending

Small Convoluted Diaphragm Gauge (PSD)

- Operates on a convoluted diaphragm as a sensor which separates high and low pressure ports. Ideally suited for use on dissimilar fluids and wet gas or fluids with high concentration of particles. Suitable for use with a diaphragm/chemical seal.
- Standard Differential Range: 0/25 thru 100 psid (1.5/7 bar)
- Maximum System Pressure Aluminum, SS: 3,000 psi (200 bar)
- Maximum System Pressure Brass: 1,500 psi (100 bar)
- Accuracy ±2% full scale ascending

Convoluted Diaphragm Gauge (PVD)

- Operates on a convoluted diaphragm sensor for low range flow, liquid and vacuum applications. Used in tank level, horizontal or vertical flow applications, filtering of very low pressure gases.
- Standard Differential Range: 0/5 thru 400” H_2O (12.4 mbar/1 bar)
- Maximum System Pressure Aluminum, brass, SS: 500 psi (35 bar)
- Maximum System Pressure Engineered plastic: 300 psi (20 bar)
- Maximum System Pressure Hastelloy® C: 500 psi (35 bar)
- Accuracy 0/5 thru 9.9” H_2O ±5%, 0/10 thru 400” H_2O ±2%

Note: Technical drawings are available upon request

Series Number (for custom, non-standard product)

P P D - ☐ - ☐ - ☐ - ☐ - ☐ - ☐ - ☐ - ☐ ☐ ☐ ☐

SERIES TYPE	Aluminum body / Stainless Steel piston (Max system pressure 3,000 psi)	A
	316 Stainless Steel body / Stainless Steel piston (Max system pressure 6,000 psi)	S
	Monel body / Monel piston, 5% accuracy (Max system pressure 5,000 psi)	M
	-> available differential ranges 0/10,15,20,25,30 only)	
	Aluminum Bronze body / Aluminum Bronze piston, 5% accuracy (Max system pressure 5,000 psi)	N
	-> available differential ranges 0/10,15,20,25,30 only)	
	Special	Z
DIAL SIZE	2.5" Round Uni-directional dial, plastic case (standard)	A
	4.5" Round Uni-directional dial, plastic case	C
	4.5" Round Bi-directional dial, plastic case	D
	3.5" Round Uni-directional dial, aluminum case	E
	4.5" Round Uni-directional dial, aluminum case	G
	4.5" Round Bi-directional dial, aluminum case	H
	Special	Z
SEAL	Buna-N (standard)	0
	Viton	1
	Neoprene	2
	PTFE	4
	Ethylene Propylene	5
	Special	Z
CONNECTION	1/4" NPTF Back (standard), not available with Gauge Options M & N	0
	1/4" NPTF End / In-line	2
	1/4" NPTF Bottom, not available with Gauge Options M & N	3
	1/2" NPTF End	4
	7/16"-20 SAE with "O" ring Back, with Gauge Options A & S	6
	Special	Z
OPTIONS	No additional options required (standard)	O
	Reversed High / Low process connections	A
	Mounting Holes in gauge body for field mounting (switch options A & B only)	C
	Mounting Holes in gauge body for field mounting (switch options L & M only)	D
	Two (2) 1/4 - 20 mounting holes (not available for C & D switch options)	E
	Carbon steel 2" pipe mounting kit (not available for C & D switch options)	F
	Stainless steel 2" pipe mounting kit (not available for C & D switch options)	G
	1/2" NPTF stainless steel adapters	K
	Glycerin filled 2.5" case (not available with Safety glass or Maxi-pointer)	L
	Glycerin filled 4.5" case (not available with Safety glass or Maxi-pointer)	L
	Maxi-pointer 2.5" case (not available with Safety glass)	M
	Maxi-pointer 4.5" case (not available with Safety glass)	M
	NACE (for sour gas applications, not available in Bronze case)	N
	CRN (Canadian Registration Number, aluminum or SS body only)	Q
	Safety glass (4.5" aluminum case only)	S
	Oxygen cleaning	T
	Stainless steel tag with SS wire	U
	Stainless steel tag with SS screw	V
	Wall mount kit (not available with Back Connections or C & D electrical options)	W
	Special	Z
SWITCH	No electrical options required (standard)	O
	1 switch in standard enclosure with grommet wire seal	A
	2 switches in standard enclosure with grommet wire seal	B
	1 switch in standard enclosure with 1/4" NPTF electrical connection & NEMA 4X	C
	2 switches in standard enclosure with 1/4" NPTF electrical connection & NEMA 4X	D
	1 switch and Differential pressure gauge in NEMA 4X plastic enclosure (not available with End connections)	G
	2 switch and Differential pressure gauge in NEMA 4X plastic enclosure (not available with End connections)	H
	1 switch in standard enclosure with DIN plug connector (DIN43650 IP65)	L
	2 switches in standard enclosure with DIN plug connector (DIN43650 IP65)	M
	Special	Z
ELECTRICAL	No electrical options required (standard)	O
	SPDT 3W, 0.25A 125VAC / VDC, adjustable range 10-90%	A
	SPDT 60W, 3.0A 240VAC / VDC, Normally open, adjustable range 25-95%	E
	SPDT 60W, 3.0A 240VAC / VDC, Normally closed, adjustable range 25-95%	F
	SPDT 60W, 3.0A 240VAC / VDC, 1 x Normally open 1 x Normally closed, adjustable range 25-95%	G
	SPDT 60W, 1.0A 240VAC / VDC, adjustable range 25-100 (price per switch)	H
	Special	Z
DIFF. RANGE	Minimum differential range 0/5psid (example) - Maximum differential range 0/110psid - Maximum system pressure of 3,000 or 5,000 or 6,000psi (based on above)	0 0 5 psid

Rolling Diaphragm Gauge (High Static Pressure Differential)

Series Number (for custom, non-standard product)

P R D - ☐ - ☐ - ☐ - ☐ - ☐ - ☐ - ☐ - ☐ ☐ ☐ ☐

SERIES		
TYPE	Aluminum body / Stainless steel, Ceramic & Acetal moving components (Max system pressure 1,000 psi)	A
	Acetal (plastic) body / Stainless steel, Ceramic & Acetal moving components (Max system pressure 500 psi)	P
	Stainless steel body / Stainless steel, Ceramic & Acetal moving components (Max system pressure 1,000 psi)	S
	Special	Z
DIAL SIZE	2.5" Round Uni-directional dial, plastic case (standard)	A
	Special	Z
SEAL	Buna-N (standard)	0
	FKM	1
	Special	Z
CONNECTION	1/4" NPTF End / In-line (standard)	2
	Special	Z
OPTIONS	Two (2) 10-32 mounting holes, spaced 1.75" apart x 0.330" deep	E
	Special	Z
SWITCH	No electrical options required (standard)	O
	1 switch in standard enclosure with DIN plug connector (DIN43650 IP65), NENA 4X	L
	Special	Z
ELECTRICAL	No electrical options required (standard)	O
	SPDT 60W, 3.0A 240VAC / VDC, Normally open, adjustable range 40-95%	E
	Special	Z

Minimum differential range 0/5psid (example) - Maximum differential range 0/50psid - Maximum system pressure of 500psi or 1,000psi (based on above) 0 0 5 psid

Series Number (for custom, non-standard product)

P S D - ☐ - ☐ - ☐ - ☐ - ☐ - ☐ - ☐ - ☐ ☐ ☐

SERIES TYPE	Aluminum body / Stainless Steel internal parts, Buna-N diaphragm & seals, PTFE guide bushings, 1/4" NPTF back connections & engineered plastic gauge case (Max system pressure 3,000 psi)	A
	Brass body / Stainless Steel internal parts, Buna-N diaphragm & seals, PTFE guide bushings, 1/4" NPTF back connections & engineered plastic gauge case (Max system pressure 1,500 psi)	B
	Stainless steel body / Stainless steel internal parts, Buna-N diaphragm & seals, PTFE guide bushings, 1/4" NPTF back connections & engineered plastic gauge case (Max system pressure 3,000 psi)	S
	Special	Z
DIAL SIZE	2.5" Round (standard)	A
	4.5" Round	C
	3.5" Round anodized aluminum case	E
	4.5" Round anodized aluminum case	G
	Special	Z
SEAL	Buna-N (standard)	0
	Viton	1
	Silicone	2
	Ethylene Propylene	5
	Special	Z
CONNECTION	1/4" NPTF Back connections (standard)	0
	1/4" NPTF top & bottom connections (non-electrical option units only)	2
	1/4" NPTF Bottom connections	3
	7/16"-20 SAE straight thread O-ring (back connections)	4
	1/2" NPTF End / In-line connections (Max system pressure 2,000 psi)	7
	1/2" NPTF End / In-line connections (Max system pressure 2,000 psi)	8
	Special	Z
OPTIONS	No additional options required (standard)	O
	Reversed High / Low process connections, not available with switch options T & W	A
	Two (2) 1/4 - 20 mounting holes	E
	Carbon steel 2" pipe mounting kit (not available for reversed port switch option)	F
	Stainless steel 2" pipe mounting kit (not available for reversed port switch option)	G
	1/2" NPTF stainless steel adapters (not available with End / In-line connections)	K
	Glycerin filled 2.5" case (not available with Safety glass or Maxi-pointer)	L
	Glycerin filled 4.5" case (not available with Safety glass or Maxi-pointer)	L
	Maxi-pointer 2.5" case (not available with Safety glass)	M
	Maxi-pointer 4.5" case (not available with Safety glass)	M
	NACE (for sour gas applications, available in Aluminum or SS body only)	N
	CRN (Canadian Registration Number, available in Aluminum or SS body only)	Q
	Safety glass (4.5" aluminum case only)	S
	Oxygen cleaning	T
	Stainless steel tag with SS wire	U
	Stainless steel tag with SS screw	V
	Wall mount kit	W
	Diaphragm seal assembly	X
	Special	Z
SWITCH	No electrical options required (standard)	O
	1 Reed switch in NEMA 4X / IP66 enclosure	A
	2 Reed switches in NEMA 4X / IP66 enclosure	B
	4/20mA transmitter in NEMA 4X / IP66 enclosure	T
	Special	Z
ELECTRICAL	No electrical options required (standard)	O
	SPDT 3W, 0.25A 125VAC / VDC	A
	SPDT 25W, 0.5A 230VAC / VDC, Normally open	B
	4/20mA transmitter, 8/28 VDC loop power, 2% accuracy ascending from 20-100% of scale	T
	Special	Z
	Minimum differential range 0/25psid (example) - Maximum differential range 0/100psid - Maximum system pressure of 3,000 or 1,500psi (based on above)	0 2 5 psid

Convoluted Diaphragm Gauge (High Static Pressure Differential)

Series Number (for custom, non-standard product)

P V D - [ ][ ] - [ ] - [ ] - [ ] - [ ] - [ ] - [ ] - [ ][ ][ ]

SERIES TYPE	Stainless Steel internal metal parts (Max system pressure 300 psi) glass reinforced engineered plastic body, two x 1/4" carbon steel compression fittings	P C
	Aluminum body, stainless Steel internal metal parts (Max system pressure 500 psi) dual 1/4" NPTF connections top & bottom	A C
	Brass body, stainless Steel internal metal parts (Max system pressure 500 psi) dual 1/4" NPTF connections top & bottom	B C
	Stainless steel body, stainless Steel internal metal parts (Max system pressure 500 psi) dual 1/4" NPTF connections top & bottom	S C
	Hastelloy-C body, Hastelloy-C internal metal parts (Max system pressure 500 psi) dual 1/4" NPTF connections top & bottom (+/- 5% ascending accuracy)	H C
DIAL SIZE	4.5" Round dial, plastic case	C
	3.5" Round dial, anodized aluminum case	E
	4.5" Round dial, anodized aluminum case	G
	Special	Z
SEAL	Buna-N (standard)	0
	FKM 0/20"H2O to 0/400"H2O	1
	Silicone 0/5"H2O to 0/100"H2O	2
	Neoprene 0/5"H2O to 0/100"H2O	3
	Ethylene Propylene 0/20"H2O to 0/400"H2O	5
	Special	Z
CONNECTION	1/4" carbon steel compression tube fittings (2) for above model P or 1/4" NPTF (4) for above models A, B or S	0
	1/4" stainless steel compression tube fittings (2)	1
	1/4" NPTF brass adapters (2) for above model P only	2
	1/4" NPTF stainless steel adapters (2) for above model P only	3
	Special	Z
OPTIONS	No additional options required (standard)	O
	Drain & bleed plugs, stainless steel (2), above model P only	B
	Drain & bleed in NEMA 4X enclosure	D
	Pipe mounting kit, carbon steel	F
	Pipe mounting kit, stainless steel	G
	Hastelloy-C internal wetted metal parts and fittings, poly body only	H
	1/2" NPTF stainless steel adapters (2), available on above models A, B & S only	K
	Maxi-pointer	M
	NACE (for sour gas applications, not available in Bronze case)	N
	CRN (Canadian Registration Number, aluminum or SS body only)	Q
	Safety glass (4.5" aluminum case only)	S
	Oxygen cleaning	T
	Stainless steel tag with SS wire	U
	Stainless steel tag with SS screw	V
	Wall mount kit (not available with Switches)	W
	Special	Z
SWITCH	No electrical options required (standard)	O
	1 Reed switch with condulet enclosure	H
	2 Reed switches with condulet enclosure	I
	1 Reed switch with condulet enclosure and plug-in connector (DIN 43650)	J
	2 Reed switches with condulet enclosure and plug-in connector (DIN 43650)	K
	1 switch in NEMA 4X plastic enclosure	L
	2 switches in NEMA 4X plastic enclosure	M
	Special	Z
ELECTRICAL	No electrical options required (standard)	O
	SPDT 3W, 0.25A 125VAC / VDC, adjustable range 10-90%	A
	Special	Z
	Minimum differential range 0/5"H2O (example) - Maximum differential range 0/400"H2O - Maximum system pressure 300psi or 500psi	0 0 5 "H2O

Description & Features:

- Designed for food, beverage & dairy and pharmaceutical applications
- ±0.75% full scale value accuracy
- Food grade glycerin filling standard
- Re-zero feature standard
- Crack/breakage-resistant polycarbonate lens standard
- Clean-In-Place design
- Steam-In-Place design
- Autoclavable
- ASME B40.100 compliant
- CRN registered
- 5 year warranty

Applications:

- Designed for all sanitary applications including food & beverage, dairy, pharmaceutical and biotechnical
- Built to withstand the harshest of sanitary applications and where 3A approval is required
- For gas, air, liquid, pasty or powdery media

Specifications	
Dial	2.5” (63mm), 4” (100mm) aluminum
Case	304 SS, polished
Repeatability	0.25% of full scale value
Linearity	0.25% of full scale value
Lens	3/16” thick polycarbonate
Over-range Capability	50% of full scale
Hysteresis	0.25% of full scale
CIP Temperature Limit	250°F (121°C) continuous
SIP Temperature Limit	300°F (149°C) 1 hour, dry
Bourdon Tube	316L SS, welded
Socket	316L SS, welded
Storage Temperature	-22°F to 195°F (-30°C to 91°C)
Temperature Effect	Less than 0.16% per 10°F (5.5°C) change in process or ambient temperature
Actuating Fill	Food grade glycerin standard (Mineral oil, silicone and Neobee-20 optional)
Case Fluid	Food grade glycerin standard (Dry, mineral oil, silicone and Neobee-20 optional)
Pulsation Dampening	Standard
Re-zero Feature	Externally adjustable micrometer pointer
Wetted Parts	316L SS, Ra = 8 microinches
Bezel	304 SS, polished
Ambient Temperature	40°F to 140°F (4°C to 60°C)
Process Temperature	0°F to 250°F (-18°C to 121°C)
Accuracy	±0.75% of full scale value

Order Codes

Dial Size	2.5" (63mm)				4" (100mm)			
Tri-Clamp® Connection	1.5" (40mm) Bottom	1.5" (40mm) Back	2" (50mm) Bottom	2" (50mm) Back	1.5" (40mm) Bottom	1.5" (40mm) Back	2" (50mm) Bottom	2" (50mm) Back
30"/0/30 psi/bar	PAG15798	PAG15798B	PAG20798	PAG20798B	PAG151021	PAG151021B	PAG201021	PAG201021B
30"/0/60 psi/bar	PAG15799	PAG15799B	PAG20799	PAG20799B	PAG151022	PAG151022B	PAG201022	PAG201022B
30"/0/100 psi/bar	PAG15791	PAG15791B	PAG20791	PAG20791B	PAG151023	PAG151023B	PAG201023	PAG201023B
30"/0/150 psi/bar	PAG15793	PAG15793B	PAG20793	PAG20793B	PAG151025	PAG151025B	PAG201025	PAG201025B
30"/0/200 psi/bar	PAG15794	PAG15794B	PAG20794	PAG20794B	PAG151026	PAG151026B	PAG201026	PAG201026B
30"/0/300 psi/bar	PAG15795	PAG15795B	PAG20795	PAG20795B	PAG151027	PAG151027B	PAG201027	PAG201027B
0/30 psi/bar	PAG15802	PAG15802B	PAG20802	PAG20802B	PAG15602	PAG15602B	PAG20602	PAG20602B
0/60 psi/bar	PAG15803	PAG15803B	PAG20803	PAG20803B	PAG15603	PAG15603B	PAG20603	PAG20603B
0/100 psi/bar	PAG15804	PAG15804B	PAG20804	PAG20804B	PAG15604	PAG15604B	PAG20604	PAG20604B
0/160 psi/bar	PAG15805	PAG15805B	PAG20805	PAG20805B	PAG15605	PAG15605B	PAG20605	PAG20605B
0/200 psi/bar	PAG15806	PAG15806B	PAG20806	PAG20806B	PAG15606	PAG15606B	PAG20606	PAG20606B
0/300 psi/bar	PAG15807	PAG15807B	PAG20807	PAG20807B	PAG15607	PAG15607B	PAG20607	PAG20607B
0/600 psi/bar	PAG15808	PAG15808B	PAG20808	PAG20808B	PAG15608	PAG15608B	PAG20608	PAG20608B

Other ranges and connection sizes available upon request. For scale change, refer to How to Order Guide for scale codes.
Autoclavable option available on 4" (100mm) dry only.

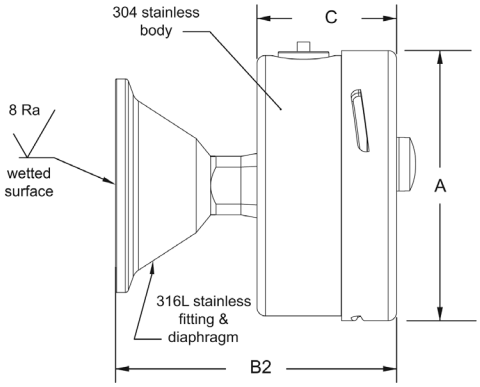

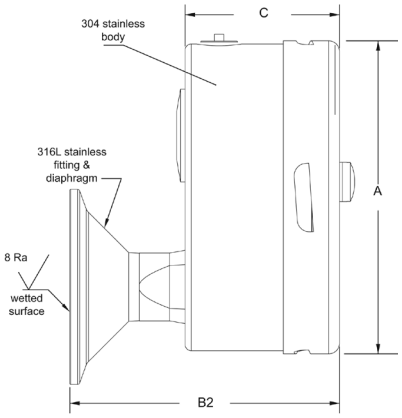

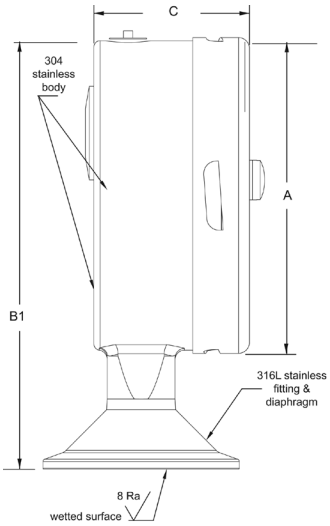

Dial	A	B1 Tri-Clamp® Bottom	B2 Tri-Clamp® Back	C
2.5"	2.5" (63mm)	3 13/16" (96.8mm)	2 5/8" (66.8mm)	1 5/16" (33.3mm)
4"	4" (100mm)	5 7/16" (138.2mm)	3 7/16" (87.4mm)	1 15/16" (49.3mm)

Tri-Clamp® is a registered trade mark of Tri-Clover

Description & Features:

- Quality series for all sanitary gauge systems
- Food grade glycerin filling standard
- Electro-polish finish
- Industrial grade polycarbonate lens standard
- Clean-In-Place and steam-in-place design
- 0.75”, 1.5” and 2” Tri-Clamp® connection bottom and back
- ASME B40.100 compliant
- CRN registered
- 5 year warranty

Applications:

- Designed for all sanitary applications including food & beverage, dairy, pharmaceutical and biotechnical
- Built to withstand the harshest of sanitary applications and where 3A approval is required
- For gas, air, liquid, pasty or powdery media

Specifications	
Dial	2.5” (63mm), 4” (100mm) aluminum
Case	304 SS, polished
Bezel	304 SS, polished
Lens	Polycarbonate
Over Pressure Limit	25% up to 600 psi (41 bar) 15% over 600 psi (41 bar)
CIP Temperature Limit	250°F (121°C) continuous
SIP Temperature Limit	266°F (130°C) 1 hour, dry
Bourdon Tube	316 SS
Socket	316 SS
Movement	304 SS
Enclosure Rating	IP65/NEMA 4X
System Fill	Food grade glycerin standard (Mineral oil, silicone and Neobee-20 optional)
Case Fill	Food grade glycerin standard (Dry, mineral oil, silicone and Neobee-20 optional)
Re-zero Feature	Adjustable micrometer pointer (4” (100mm) dial only)
Wetted Parts	316L SS, Ra = 8 microinches
Ambient Temperature	Glycerin filled: 40°F to 150°F (4°C to 65°C)
Process Temperature	0°F to 250°F (-18°C to 121°C)
Accuracy	2.5” (63mm): ±1.5% of full scale 4” (100mm): ±1.0% of full scale
Agency Compliance	3A standard 74-06

Order Codes (products in bold are normally stock in North America)

Dial Size	2.5” (63mm)						4” (100mm)			
Tri-Clamp® Connection	0.75” (20mm) Bottom	0.75” (20mm) Back	1.5” (40mm) Bottom	1.5” (40mm) Back	2” (50mm) Bottom	2” (50mm) Back	1.5” (40mm) Bottom	1.5” (40mm) Back	2” (50mm) Bottom	2” (50mm) Back
30” Hg Vac/bar	PSQ34797	PSQ34797B	PSQ15797	PSQ15797B	PSQ20797	PSQ20797B	PSQ15202	PSQ15202B	PSQ20120	PSQ20120B
30”/0/30 psi/bar	PSQ34798	PSQ34798B	PSQ15798	PSQ15798B	PSQ20798	PSQ20798B	PSQ151021	PSQ151021B	PSQ201021	PSQ201021B
30”/0/60 psi/bar	PSQ34799	PSQ34799B	PSQ15799	PSQ15799B	PSQ20799	PSQ20799B	PSQ151022	PSQ151022B	PSQ201022	PSQ201022B
30”/0/100 psi/bar	PSQ34791	PSQ34791B	PSQ15791	PSQ15791B	PSQ20791	PSQ20791B	PSQ151023	PSQ151023B	PSQ201023	PSQ201023B
30”/0/150 psi/bar	PSQ34793	PSQ34793B	PSQ15793	PSQ15793B	PSQ20793	PSQ20793B	PSQ151025	PSQ151025B	PSQ201025	PSQ201025B
30”/0/200 psi/bar	PSQ34794	PSQ34794B	PSQ15794	PSQ15794B	PSQ20794	PSQ20794B	PSQ151026	PSQ151026B	PSQ201026	PSQ201026B
30”/0/300 psi/bar	PSQ34795	PSQ34795B	PSQ15795	PSQ15795B	PSQ20795	PSQ20795B	PSQ151027	PSQ151027B	PSQ201027	PSQ201027B
0/30 psi/bar	PSQ34802	PSQ34802B	PSQ15802	PSQ15802B	PSQ20802	PSQ20802B	PSQ15602	PSQ15602B	PSQ20602	PSQ20602B
0/60 psi/bar	**PSQ34803**	PSQ34803B	PSQ15803	PSQ15803B	PSQ20803	PSQ20803B	PSQ15603	PSQ15603B	PSQ20603	PSQ20603B
0/100 psi/bar	PSQ34804	PSQ34804B	**PSQ15804**	PSQ15804B	PSQ20804	PSQ20804B	PSQ15604	PSQ15604B	PSQ20604	PSQ20604B
0/160 psi/bar	PSQ34805	PSQ34805B	PSQ15805	PSQ15805B	PSQ20805	PSQ20805B	PSQ15605	PSQ15605B	PSQ20605	PSQ20605B
0/200 psi/bar	PSQ34806	PSQ34806B	PSQ15806	PSQ15806B	PSQ20806	PSQ20806B	PSQ15606	PSQ15606B	PSQ20606	PSQ20606B
0/300 psi/bar	PSQ34807	PSQ34807B	PSQ15807	PSQ15807B	PSQ20807	PSQ20807B	PSQ15607	PSQ15607B	PSQ20607	PSQ20607B
0/600 psi/bar	PSQ34808	PSQ34808B	PSQ15808	PSQ15808B	PSQ20808	PSQ20808B	PSQ15608	PSQ15608B	PSQ20608	PSQ20608B
0/1,000 psi/bar	PSQ34809	PSQ34809B	PSQ15809	PSQ15809B	PSQ20809	PSQ20809B	PSQ15609	PSQ15609B	PSQ20609	PSQ20609B

Other ranges and connection sizes available upon request. For scale change, refer to How to Order Guide for scale codes.

2.5” Bottom Connection 0.75” Tri-Clamp®

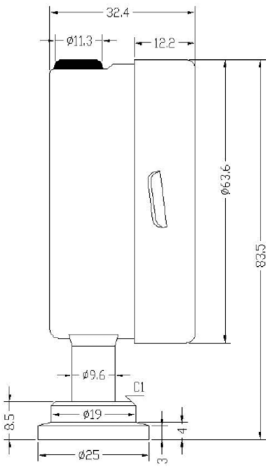

2.5” Bottom Connection 1.5” Tri-Clamp®

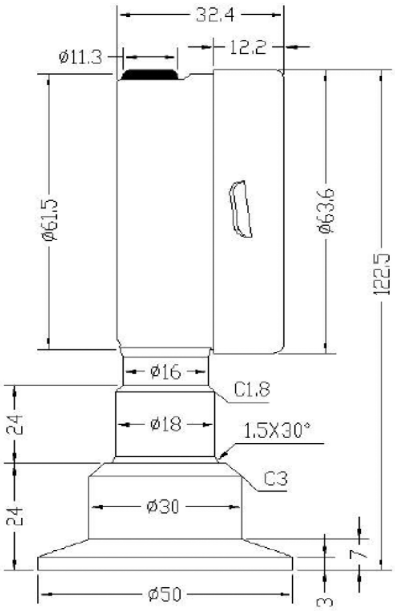

2.5” Bottom Connection 2” Tri-Clamp®

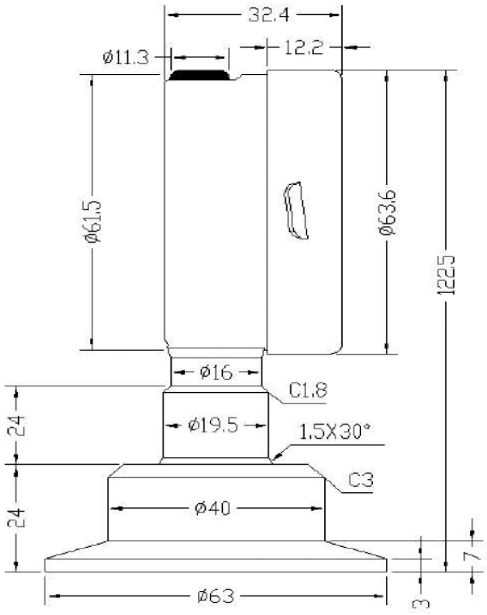

Tri-Clamp® is a registered trade mark of Tri-Clover

2.5” Back Connection 0.75” Tri-Clamp®

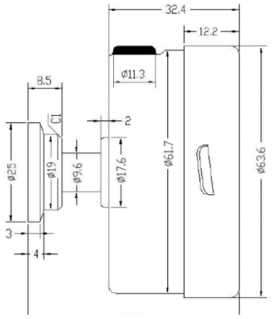

2.5” Back Connection 1.5” Tri-Clamp®

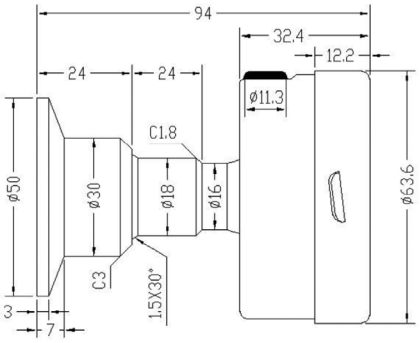

2.5” Back Connection 2” Tri-Clamp®

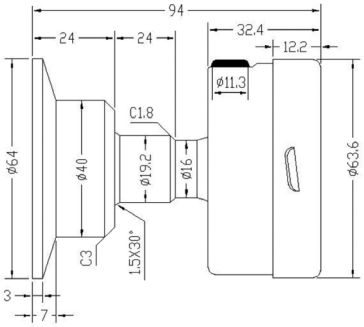

4” Bottom Connection 1.5” Tri-Clamp®

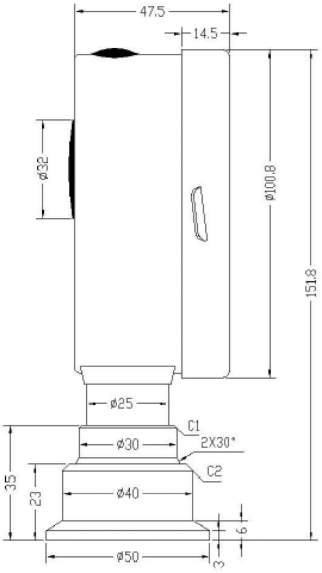

4” Bottom Connection 2” Tri-Clamp®

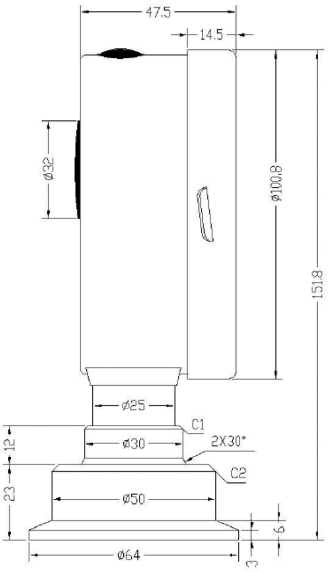

4” Back Connection 1.5” Tri-Clamp®

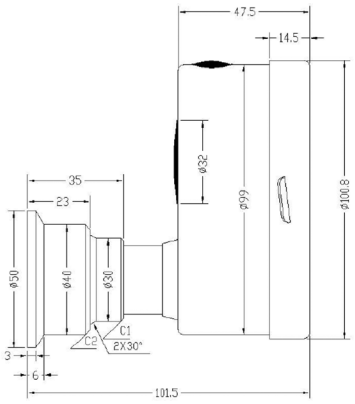

4” Back Connection 2” Tri-Clamp®

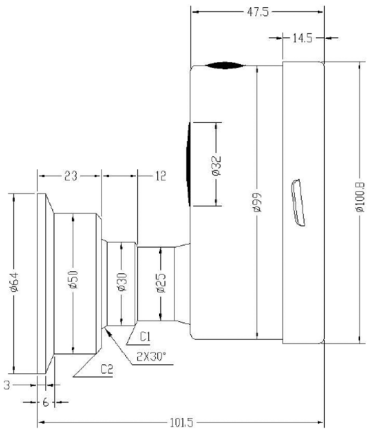

PCG Compressed Gas Gauge

LISTED

Description & Features:

- Economical 2” (50mm) gauge with built-in safety features
- Safety blowout back steel case
- ASME B40.100 compliant
- UL listed
- CRN registered
- 5 year warranty

Applications:

- Beverage dispensing, regulators and tanks.
- Low pressures are used on the down stream side of a regulator. High pressures are used for measuring cylinder gas or tank pressures

Specifications	
Dial	1.5” (40mm), 2” (50mm)
Case	Steel with blowout back, painted black
Lens	Acrylic
Ring	Steel, painted black
Socket	Brass
Connection	1/8” NPT or 1/4” NPT, bottom or back
Bourdon Tube	Brass
Movement	Brass
Pointer	Aluminum, painted black
Over-pressure Limit	25% of full scale value
Working Pressure	Maximum 75% of full scale value
Ambient/Process Temperature	-40°F to 150°F (-40°C to 65°C)
Accuracy	±3-2-3% ANSI/ASME Grade B
Enclosure Rating	IP52
Warning	**WARNING:** This product can expose you to chemicals including lead, which is known to the State of California to cause cancer and birth defects or other reproductive harm. For more information go to www.P65Warnings.ca.gov.

Order Codes

Dial Size	1.5” (40mm)	2” (50mm)	
Connection	1/8” Back	1/8” Back	1/4” Bottom
0/30 psi	PCG9014	-	PCG9020
0/60 psi	PCG9015	-	PCG9021
0/100 psi	-	PCG9017	PCG9022
0/160 psi	PCG9016	PCG9018	PCG9023
0/300 psi	-	PCG9019	PCG9024
0/2,000 psi	-	-	PCG9025
0/3,000 psi	-	-	PCG9026

Other ranges and connection sizes available upon request. For scale change, refer to How to Order Guide for scale codes.

UL252A recognized - low pressures 30-300 psi
UL404 listed - high pressures 2000 psi and 3000 psi

1.5” Back Connection

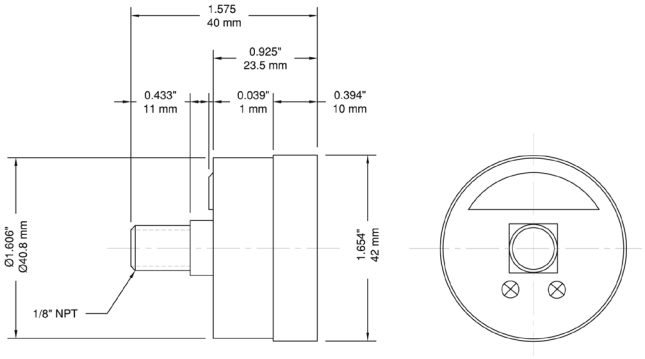

2” Back Connection

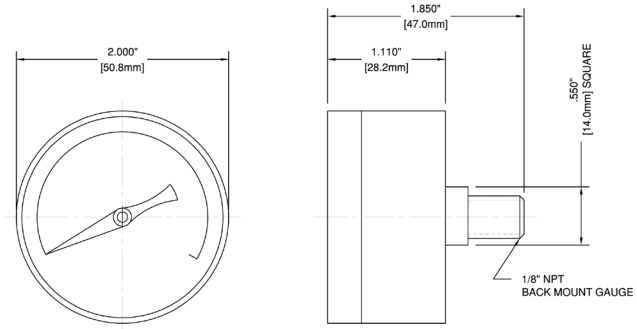

PRL Regulator Gauge

Description & Features:

- Small diameter, all stainless steel gauge
- 1.5” (40mm) and 2” (50mm) dials
- Full view snap-in lens
- Back and bottom connection
- ASME B40.100 compliant
- CRN registered
- 5 year warranty

Applications:

- Regulators, valve positioners and actuators that require a reliable and corrosion-resistant pressure gauge

Specifications	
Dial	1.5” (40mm), 2” (50mm) white aluminum with black and red markings
Case	304 SS
Lens	Acrylic, snap-in type
Socket	316 SS
Connection	1/8” NPT or 1/4” NPT standard
Bourdon Tube	316 SS
Movement	304 SS
Pointer	Aluminum, painted black
Welding	Silver alloy
Over-pressure Limit	25% of full scale value
Working Pressure	Maximum 75% of full scale value
Ambient/Process Temperature	-40°F to 150°F (-40°C to 65°C)
Accuracy	±2.5% of full scale value
Enclosure Rating	IP52

Order Codes (products in bold are normally stock in North America)

Dial Size	1.5” (40mm)		2” (50mm)			
Connection	1/8” Bottom	1/8” Back (CB)	1/8” Bottom	1/8” Back (CB)	1/4” Bottom	1/4” Back (CB)
30”/0/15 psi/kPa	-	-	-	-	PRL017	PRL026
30”/0/60 psi/kPa	-	-	-	PRL040	PRL018	PRL027
30”/0/100 psi/kPa	-	-	-	-	PRL019	PRL028
30”/0/160 psi/kPa	-	-	-	-	PRL020	PRL029
0/30 psi/kPa	PRL001	**PRL005**	PRL009	PRL013	PRL021	PRL030
0/60 psi/kPa	PRL002	**PRL006**	PRL010	PRL014	PRL022	PRL031
0/100 psi/kPa	PRL003	**PRL007**	PRL011	PRL015	PRL023	PRL032
0/160 psi/kPa	PRL004	**PRL008**	PRL012	PRL016	**PRL024**	**PRL033**
0/200 psi/kPa	-	-	-	-	PRL042	-
0/400 psi/kPa	-	-	-	-	PRL036	-
0/600 psi/kPa	-	-	-	-	-	PRL034
0/3,000 psi/kPa	PRL038	PRL041	-	-	PRL025	PRL035
0/5,000 psi/kPa	-	PRL039	-	-	-	-

Other ranges and connection sizes available upon request. For scale change, refer to How to Order Guide for scale codes.

1.5” Bottom Connection

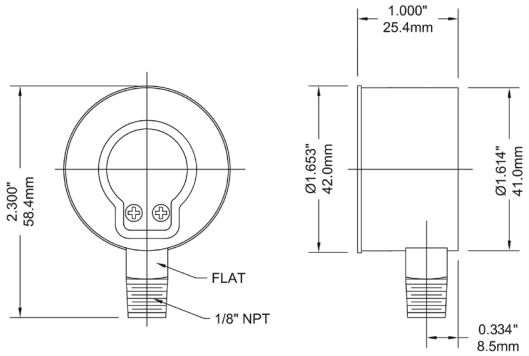

1.5” Back Connection

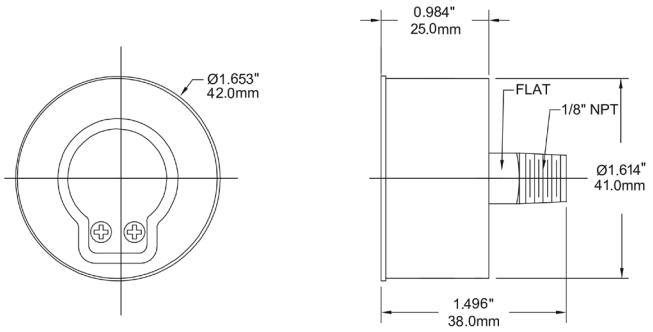

2” Bottom Connection

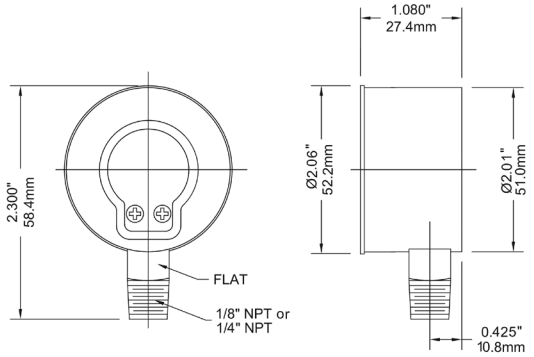

2” Back Connection

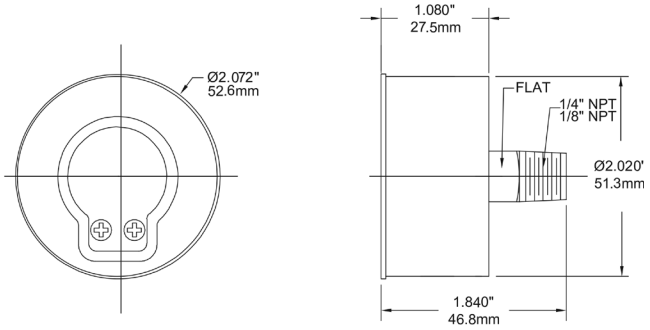

PSP Spiral Tube Gauge

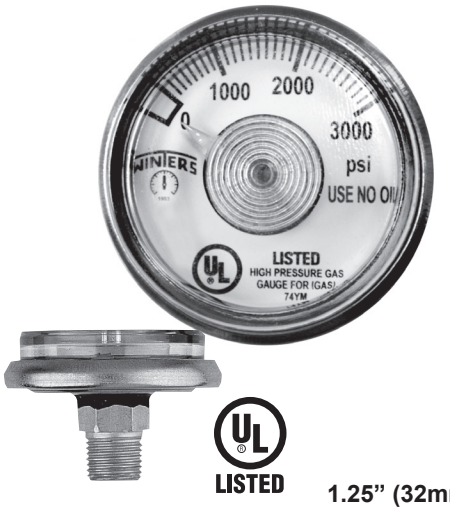

LISTED

Description & Features:

- Reliable, small diameter, low profile gauge
- 1” (25mm) to 1.5” (40mm) sizes
- 1/8” NPT socket
- Direct drive (no linkages or hairsprings) eliminating premature failure from the gear and movement
- Safety over-pressure port on the lens
- “Use No Oil” for use in oxygen service
- ASME B40.100 compliant
- CRN registered
- UL listed for 1.25” and 1.5” gauges
- 5 year warranty

Applications:

- Commonly used on portable pneumatic equipment such as compressors, hand-held sprayers, pressurized recreational guns, oxygen tanks and regulators, pumps and fire extinguishers

1.25” (32mm) and 1.5” (40mm)
UL252A Recognized - Low pressures up to 1,000 psi, Listing No. MH25761
UL404 Listed - High pressures - 0 to 3,000 psi, Listing No. SA12053
Note: Non-UL Listed PSP gauges also available

Specifications	
Dial	1” (25mm), 1.125” (30mm), 1.25” (32mm) or 1.5” (40mm) white aluminum with black markings
Case	1” (25mm): Nickel plated brass Others: 304 SS
Lens	Plexiglass
Spiral/Socket	60 to 2,000 psi: Brass 3,000 psi and above: 304 SS
Connection	1/8” NPT standard, back
Pointer	2,000 psi and below: Brass 3,000 psi and above: 304 SS
Over-pressure Limit	10% of full scale value 25% of full scale value (0-3,000 psi, UL404 listed)
Working Pressure	Maximum 75% of full scale value
Ambient/Process Temperature	-40°F to 150°F (-40°C to 65°C)
Accuracy	±3-2-3% ANSI/ASME Grade B
Enclosure Rating	IP65
Warning (brass internals only)	⚠ **WARNING:** This product can expose you to chemicals including lead, which is known to the State of California to cause cancer and birth defects or other reproductive harm. For more information go to www.P65Warnings.ca.gov.

Order Codes*

Dial Size	1” (25mm)	1.125” (30mm)	1.25” (32mm)	1.5” (40mm)
0/60 psi	-	PSP115060	PSP125060	PSP150060
0/100 psi	PSP10100	PSP1150100	PSP1250100	PSP1500100
0/160 psi	PSP10160	PSP1150160	PSP1250160	PSP1500160
0/200 psi	PSP10200	PSP1150200	PSP1250200	PSP1500200
0/300 psi	PSP10300	PSP1150300	PSP1250300	PSP1500300
0/600 psi	PSP10600	PSP1150600	PSP1250600	PSP1500600
0/1,000 psi	PSP101000	PSP11501000	PSP12501000	PSP15001000
0/1,500 psi	PSP101500	PSP11501500	PSP12501500	PSP15001500
0/2,000 psi	PSP102000	PSP11502000	PSP12502000	PSP15002000
0/3,000 psi	PSP103000	PSP11503000	PSP12503000	PSP15003000
0/4,000 psi	PSP104000	PSP11504000	PSP12504000	PSP15004000
0/5,000 psi	PSP105000	PSP11505000	PSP12505000	PSP15005000

Other ranges and connection sizes available upon request. For scale change, refer to How to Order Guide for scale codes.
For options, attach suffix to end of order code: i.e. PSP15001500-1.5BOOT for 1.5” PROTECTIVE BOOT

Option suffix:
1.25BOOT = 1.25” (32mm) Protective rubber boot
1.5BOOT = 1.5” (40mm) Protective rubber boot
*Minimum order quantity required

1” Spiral Hex Tube Gauge

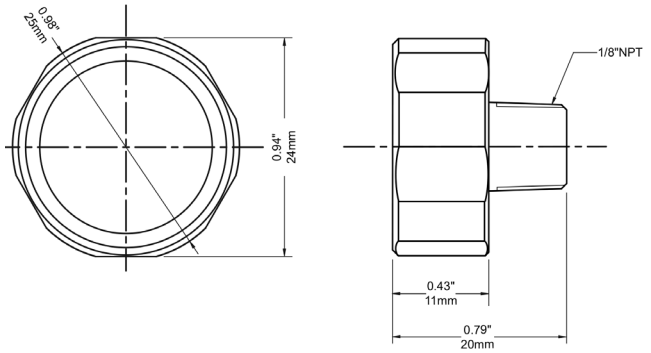

1.125” Spiral Tube Gauge

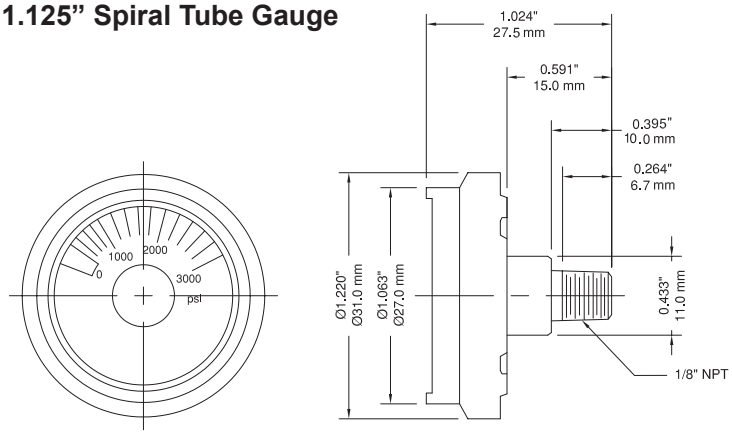

1.25” Spiral Tube Gauge

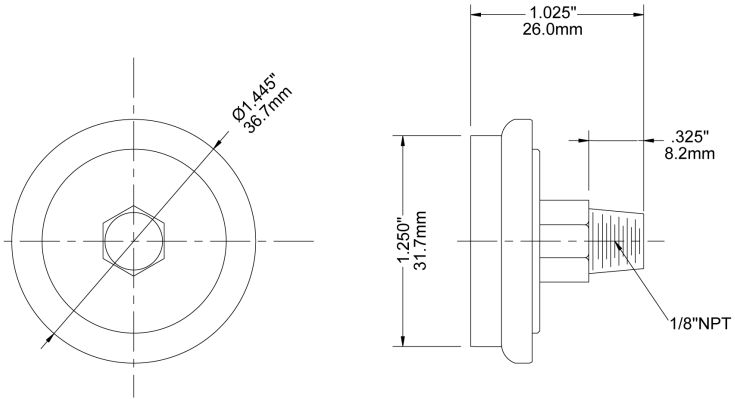

1.5” Spiral Tube Gauge

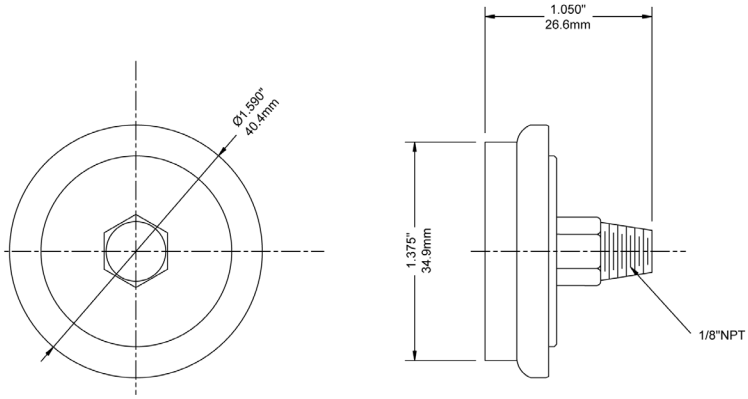

PWL Welding Gauge

Description & Features:

- Economical, non-sparking brass case gauge
- 1.5” (40mm), 2” (50mm) and 2.5” (63mm) brass case
- “USE NO OIL” on dial
- Brass socket
- Threaded-on polycarbonate lens
- ASME B40.100 compliant
- CRN registered
- 5 year warranty

Applications:

- Welding tank regulators or manifolds, beverage dispensing regulators and other pressurized tanks
- Used on the down stream side of a regulator and high pressure of cylinder gases

Specifications	
Dial	1.5” (40mm), 2” (50mm), 2.5” (63mm) white aluminum with black and red markings
Case	Brass, polished
Lens	Polycarbonate, threaded
Socket	Brass
Connection	1.5” (40mm) dial: 1/8” NPT bottom, 2” (50mm), 2.5” (63mm): 1/4” NPT bottom
Bourdon Tube	Phosphor bronze
Movement	Brass
Pointer	Aluminum, painted black
Welding	Silver alloy
Over-pressure Limit	25% of full scale value
Working Pressure	Maximum 75% of full scale value
Ambient/Process Temperature	-40°F to 150°F (-40°C to 65°C)
Accuracy	±3-2-3% ANSI/ASME Grade B
Enclosure Rating	IP52
Warning	**WARNING:** This product can expose you to chemicals including lead, which is known to the State of California to cause cancer and birth defects or other reproductive harm. For more information go to www.P65Warnings.ca.gov.

Note: Also see PCG Compressed Gas Gauge for more choices

Order Codes (products in bold are normally stock in North America)

Dial Size	1.5” (40mm)	2” (50mm)	2.5” (63mm)
Connection	**1/8” Bottom**	**1/4” Bottom**	**1/4” Bottom**
0/30 psi/kPa	PWL2620	**PWL2720**	PWL2820
0/60 psi/kPa	PWL2621	PWL2721	PWL2821
0/100 psi/kPa	PWL2622	PWL2722	PWL2822
0/160 psi/kPa	-	PWL2723	-
0/200 psi/kPa	PWL2624	**PWL2724**	PWL2824
0/400 psi/kPa	PWL2626	PWL2726	PWL2826
0/600 psi/kPa	**PWL2627**	PWL2727	-
0/3,000 psi/kPa	-	PWL2731	-
0/4,000 psi/kPa	PWL2632	**PWL2732**	**PWL2832**

Other ranges and connection sizes available upon request. For scale change, refer to How to Order Guide for scale codes.

2” Bottom Connection

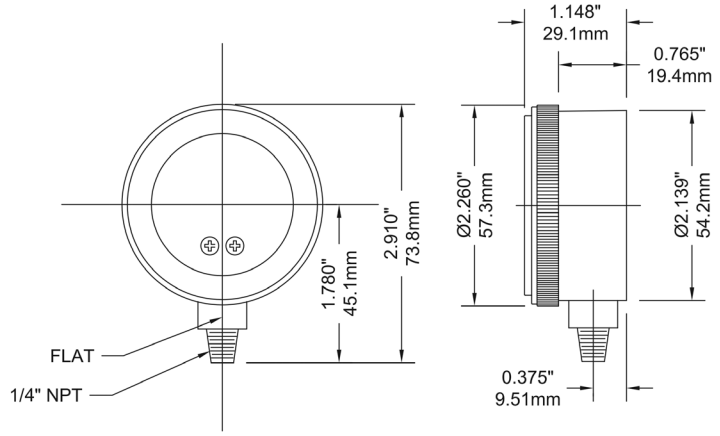

2.5” Bottom Connection

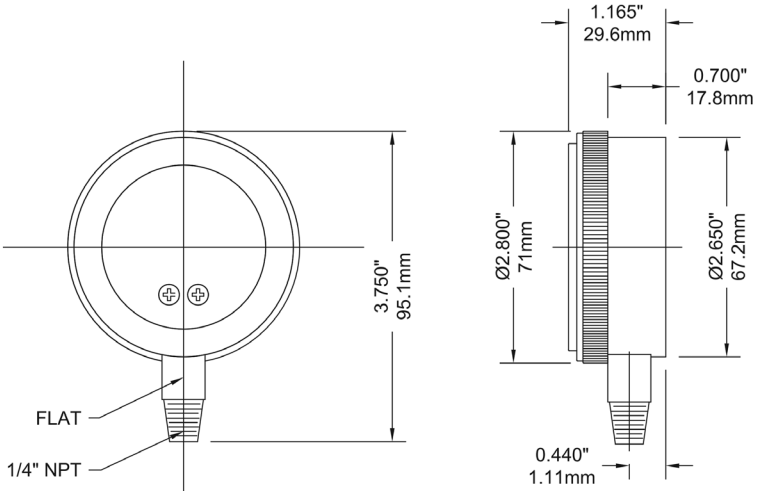

DPG Digital Pressure Gauge

Description & Features:

- Simple 2 button operation
- Reset to zero feature
- Backlight turns on when on/off button is pressed
- Option for display to remain continuously on
- Continuous peak pressure indication option
- 316L welded diaphragm seal
- Rubber boot is standard
- ASME B40.100 compliant
- ±1% accuracy (±0.5% optional for gauges up to 10,000 psi)
- 5 year warranty

Applications:

- Ideal for commercial and industrial application in both test measurement and general purpose installations

Specifications	
Case Size	2.5” (63mm)
Case Material	ABS
Rubber Boot	Silicone rubber
LCD Display	2” x 3/4” (48mm x 16mm)
Connection	1/4” NPT 304SS
Sensor	316L welded, Piezo
Operating Life	1 million cycles
Power Supply	2 x AAA battery (1.5V)
Battery Life	2 yrs (auto shut-off mode)
Power Mode	Auto or manual shut-off
Display Digits	4 digits to 5,000 psi 5 digits for 10,000 psi and 15,000 psi
Pressure Unit Selection	psi, mH_2O, mmHg, mbar, kPa ranges ≤ 100 psi psi, bar, kgf/cm^2, MPa, atm ranges ≥ 160 psi
Response Time	≤ 3 Hz display refresh rate
Proof / Burst Pressure	200% / 300% FS
Operating / Storage Temperature	14ºF to 122ºF (-10ºC to 50ºC) -4ºF to 167ºF (-20ºC to 75ºC)
Accuracy	±1% (±0.5% optional for gauges up to 10,000 psi)
Enclosure Rating	IP60

Order Codes (products in bold are normally stock in North America)

Dial Size	2.5” (63mm)
Connection	1/4” Bottom
Socket	SS
-15 psi	**DPG210**
-15/0/15 psi	**DPG203**
-15/0/30 psi	**DPG204**
-15/0/60 psi	**DPG205**
-15/0/100 psi	**DPG206**
-15/0/150 psi	**DPG207**
-15/0/200 psi	**DPG208**
-15/0/300 psi	**DPG209**
0/15 psi	**DPG211**
0/30 psi	**DPG212**
0/60 psi	**DPG213**
0/100 psi	**DPG214**
0/160 psi	**DPG215**
0/200 psi	**DPG216**
0/300 psi	**DPG217**
0/600 psi	**DPG218**
0/1,000 psi	**DPG219**
0/1,500 psi	**DPG220**
0/2,000 psi	**DPG221**
0/3,000 psi	**DPG222**
0/5,000 psi	**DPG223**
0/10,000 psi	**DPG224**
0/15,000 psi	**DPG225**

Other ranges and connection sizes available upon request. For scale change, refer to How to Order Guide for scale codes. **For options, attach suffix to end of order code: i.e. DPG2245 for ±0.5% Accuracy.**

Option suffix:
5 = ±0.5% Accuracy (available on gauges up to 10,000 psi)

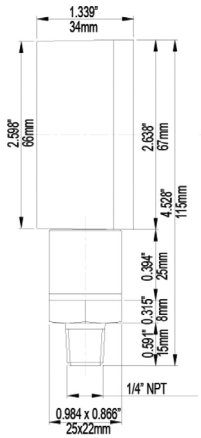

Without Rubber Boot

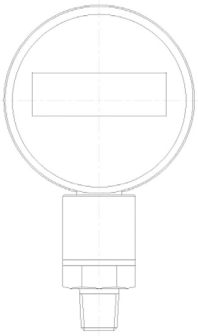

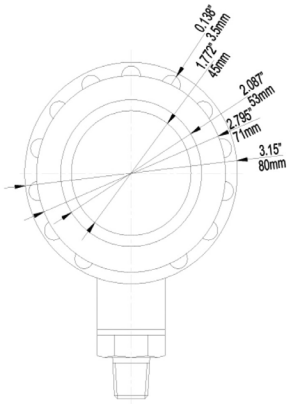

With Rubber Boot

Description & Features:

- To measure pressure and temperature of most ammonia systems
- ±0.5% to ±3-2-3% accuracy available
- 2.5” (63mm) to 10” (250mm) dial sizes
- ASME B40.100 compliant
- CRN registered
- 5 year warranty

Applications:

- Used to display pressure and temperature on refrigeration systems

RoHS compliant

Note: RoHS applies to SS internals only

Specifications	Accuracy: ±0.5% to ±1%	Accuracy: ±1.5%	Accuracy: ±3-2-3%
Dial	4” (100mm), 6” (150mm), 8.5” (215mm), 10” (250mm): White aluminum with black and red markings	2.5” (63mm), 3.5” (90mm), 4” (100mm): White aluminum with black and red markings	2.5” (63mm), 4” (100mm): White aluminum with black and red markings
Case	4” (100mm), 6” (150mm): AISI 304 SS 8.5” (215mm), 10” (250mm): Aluminum case	2.5” (63mm), 4” (100mm): AISI 304 SS 3.5” (90mm): Steel, painted black	2.5” (63mm), 4” (100mm): Steel, painted black
Lens	Polycarbonate	Polycarbonate	Polycarbonate
Ring	4” (100mm), 6” (150mm): 304 SS 8.5” (215mm), 10” (250mm): Aluminum	2.5” (63mm), 4” (100mm): 304 SS 3.5” (90mm): Steel painted black	2.5” (63mm), 4” (100mm): Steel painted black
Socket	316L SS	316L SS	2.5” (63mm): Steel 4” (100mm): Nickel plated steel
Connection	1/4” NPT	1/4” NPT	1/4” NPT
Bourdon Tube	316L SS, drawn seamless	316L SS, drawn seamless	316 SS
Movement	304 SS	304 SS	304 SS
Pointer	Aluminum, anodized black, micrometer adjustable	Aluminum, anodized black	Aluminum, anodized black
Welding	TIG	TIG	TIG
Over-pressure Limit	30% of full scale value	30% of full scale value	30% of full scale value
Working Pressure	Maximum 75% of full scale value	Maximum 75% of full scale value	Maximum 75% of full scale value
Ambient/Process Temperature	Dry: -40°F to 150°F (-40°C to 65°C) Glycerin filled: -4°F to 150°F (-20°C to 65°C)	Dry: -40°F to 150°F (-40°C to 65°C) Glycerin filled: -4°F to 150°F (-20°C to 65°C)	Dry: -40°F to 150°F (-40°C to 65°C)
Accuracy	4” (100mm), 6” (150mm): ±1% ANSI/ASME Grade 1A 8.5” (215mm), 10” (250mm): ±0.5% ANSI/ASME Grade 2A	±1.5% of full scale value	±3-2-3% ANSI/ASME Grade B
Enclosure Rating	2.5” (63mm), 4” (100mm), 6” (150mm): IP65 8.5” (215mm), 10” (250mm): IP52	IP65	IP52

Order Codes (products in bold are normally stock in North America)

	Accuracy: ±0.5% to ±1%		Accuracy: ±1.5%		Accuracy: ±3-2-3%	
Dial Size	**30/0/150 psi/°F**	**30/0/300 psi/°F**	**30/0/150 psi/°F**	**30/0/300 psi/°F**	**30/0/150 psi°/F**	**30/0/300 psi/°F**
2.5” (63mm) Bottom	-	-	**PAM1750**	**PAM1751**	**PAM1699**	PAM1700
2.5” (63mm) Back (CB)	-	-	PAM1752	PAM1753	-	-
3.5” (90mm) Bottom	-	-	PAM1717	**PAM1818**	-	-
4” (100mm) Bottom	PAM1705	PAM1706	**PAM1701**	**PAM1702**	PAM1695	PAM1696
4” (100mm) Back (LB)	PAM1708	PAM1709	-	-	-	-
4” (100mm) Back (CB)	-	-	PAM1703	PAM1704	PAM1697	PAM1698
6” (150mm) Bottom	PAM1710	PAM1711	-	-	-	-
8.5” (215mm) Bottom	PAM1712	PAM1713	-	-	-	-
10” (250mm) Bottom	PAM1714	PAM1715	-	-	-	-

Other ranges and connection sizes available upon request. For scale change, refer to How to Order Guide for scale codes. Glycerin fill available (except on 8.5” (215mm), 10” (250mm) dials and gauges with a ±3-2-3% accuracy). Front/back flange and u-clamp available.

2.5” Bottom Connection

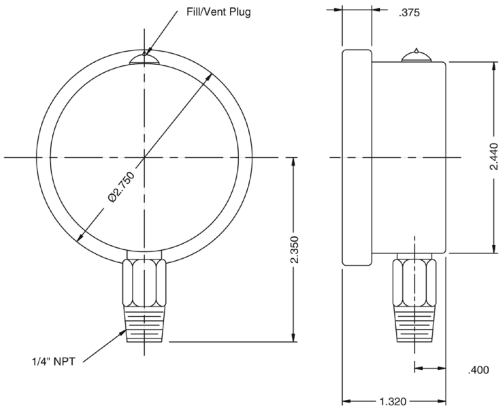

2.5” Back Connection

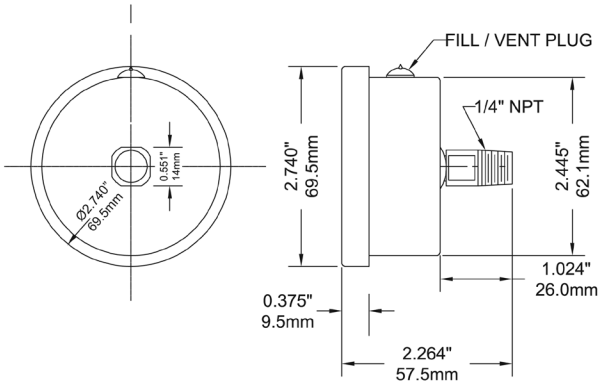

4” Bottom Connection

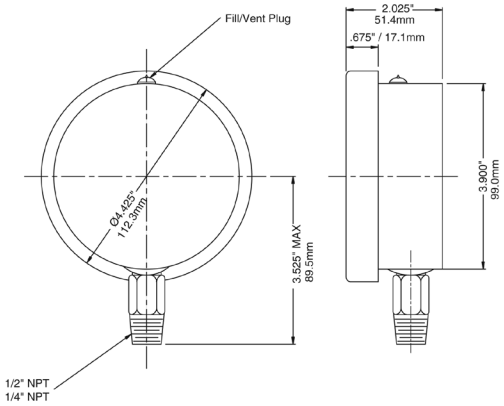

4” Back Connection

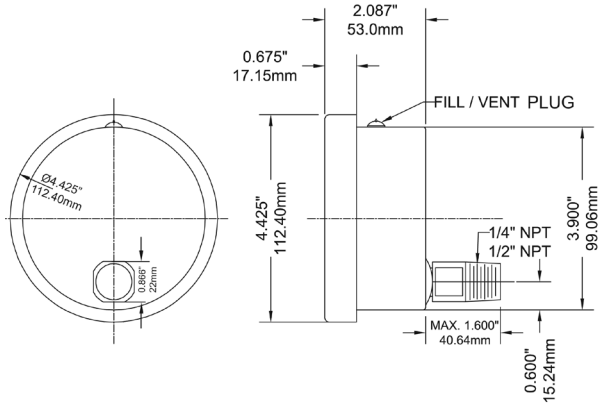

6” Bottom Connection

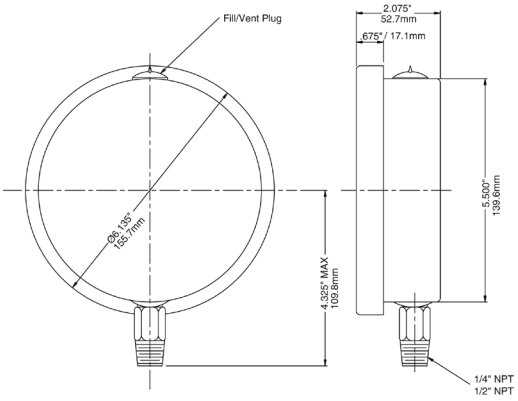

8.5” Bottom Connection with Back Flange

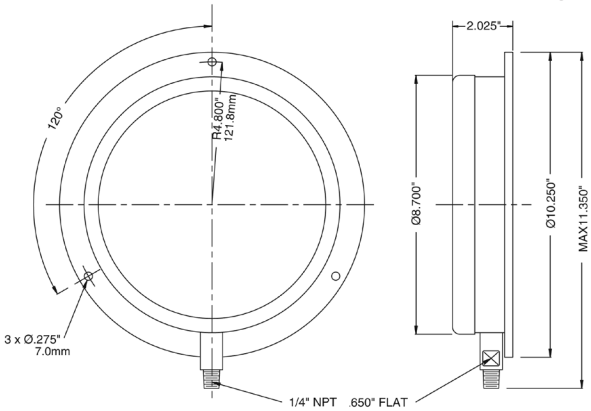

PAM with Accuracy ±1.5%
3.5” Bottom Connection

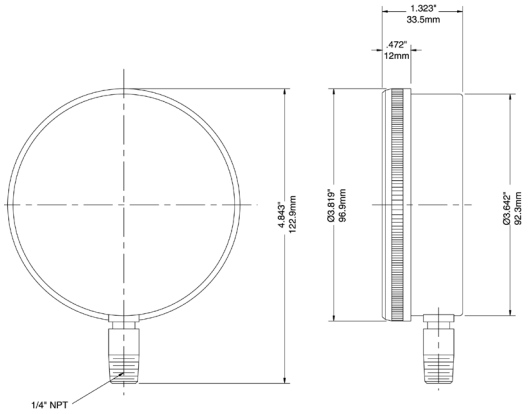

4” Bottom Connection

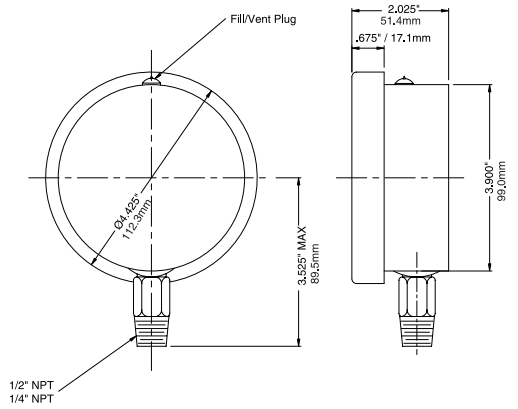

4” Back Connection

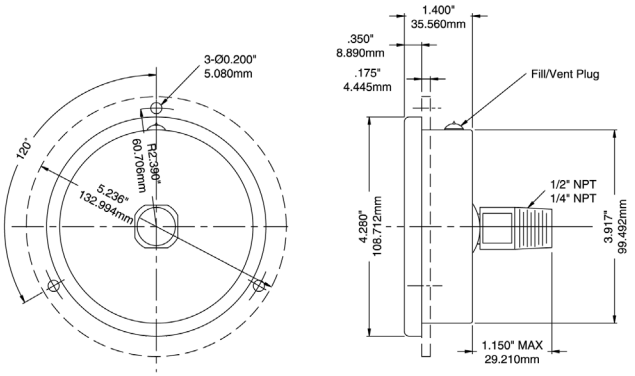

PAM with Accuracy ±3-2-3%
2.5” Bottom Connection

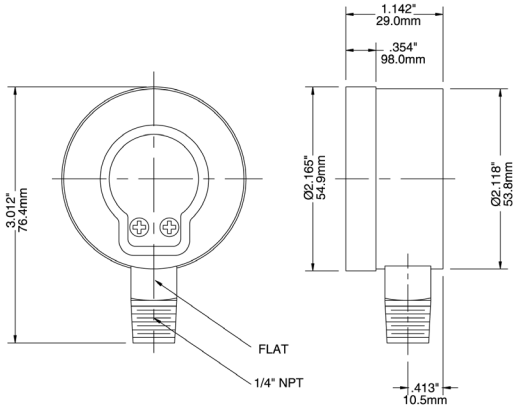

4” Bottom Connection

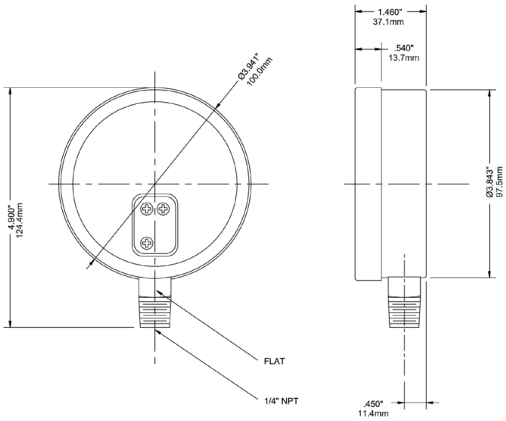

4” Back Connection

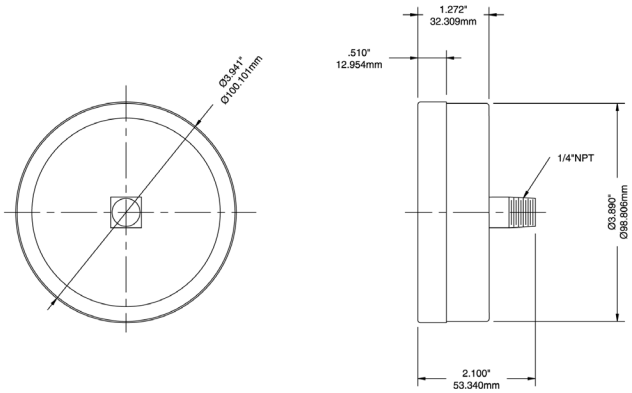

PFE Sprinkler Gauge

Description & Features:

- Specially designed for fire sprinkler systems
- Suitable for air and water media
- Corrosion resistant case
- Dual scales (psi/kpa, psi/bar, psi/kg/cm²) and single scale (psi) pressure ratings
- Approved by Factory Mutual (FM) and listed by Underwriter Laboratory (UL-393), USA and Canada
- Internal pointer over-travel stop
- ASME B40.100 compliant
- CRN registered
- 5 year warranty

Applications:

- Ideally suited for fire sprinkler systems and fire fighting equipment
- Suitable for non-clogging and non-corrosive media

Specifications	
Dial	3.5” (90mm), white aluminum with black and red markings
Case	Black plastic
Lens	Polycarbonate, threaded
Socket	Brass
Connection	1/4” NPT standard, bottom
Bourdon Tube	Phosphor bronze
Movement	Brass
Pointer	Aluminum, black
Welding	Silver Alloy
Working Pressure	Maximum 75% of full scale value
Ambient/Process Temperature	-40°F to 150°F (-40°C to 65°C)
Accuracy	±3-2-3% ASME Grade B
Enclosure Rating	IP52
Warning	⚠ **WARNING:** This product can expose you to chemicals including lead, which is known to the State of California to cause cancer and birth defects or other reproductive harm. For more information go to www.P65Warnings.ca.gov.

Order Codes (products in bold are normally stock in North America)

Product	Air	Water	Air/Water
0/80/retard/250 psi	**PFE3932R1**	-	-
0/300 psi	-	**PFE3933R1**	**PFE3935R1**
0/80/retard/250 psi/kPa	**PFE3932**	-	-
0/300 psi/kPa	-	**PFE3933**	**PFE3935**
0/80/retard/250 psi/bar	PFE3932R1R11	-	-
0/300 psi/bar	-	PFE3933R1R11	PFE3935R1R11
0/80/retard/250 psi/kg/cm²	PFE3932R1R3	-	-
0/300 psi/kg/cm²	-	PFE3933R1R3	PFE3935R1R3

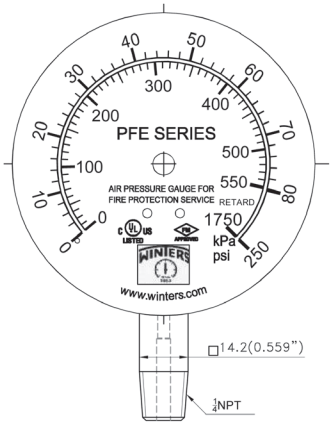

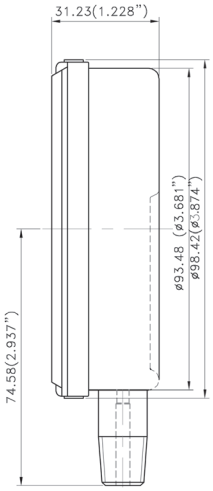

Description & Features:

- 2.5” (63mm) to 6” (150mm) durable gauges
- 2.5” (63mm) dial has a blue or red coloured case for easy identification
- Dual scale (psi/°F)
- Flutterless movement on the 2.5” (63mm)
- Chlorofluorocarbon (CFC) temperature scales (R-12, R-22 & R-502)
- Brass internals
- 1/4” NPT standard
- ASME B40.100 compliant
- CRN registered
- 5 year warranty

Applications:

- Refrigeration equipment and refrigeration recovery equipment
- Suitable for non-clogging and non-corrossive media

Specifications	
Dial	2.5” (63mm), 4” (100mm), 6” (150mm): White aluminum
Case	2.5” (63mm): Plastic, colour coded, blue for low pressure and red for high pressure 4” (100mm), 6” (150mm): Steel, painted black
Lens	2,5” (63mm): Plexiglass, threaded 4” (100mm), 6” (150mm): Glass
Ring	2.5” (63mm): SS, crimped 4” (100mm): Brass, polished 6” (150mm): Steel, painted black
Connection	1/8” NPT or 1/4” NPT standard
Restrictor Screw	Standard
Recalibrator Screw	Standard
Bourdon Tube	2.5” (63mm): Phosphor bronze, vibration free (flutterless movement) 4” (100mm), 6” (150mm): Phosphor bronze
Pointer	Aluminum, anodized black
Welding	#50 tin solder
Over-pressure Limit	25% of full scale value
Scale	psi/ºF (R-12/R-22/R-502)
Working Pressure	Maximum 75% of full scale value
Ambient/Process Temperature	-40°F to 158°F (-40°C to 70°C)
Accuracy	2.5” (63mm): ±2% of full scale value 4” (100mm), 6” (150mm): ±1% ANSI/ASME Grade 1A
Enclosure Rating	IP52
Warning (brass internals only)	⚠ **WARNING:** This product can expose you to chemicals including lead, which is known to the State of California to cause cancer and birth defects or other reproductive harm. For more information go to www.P65Warnings.ca.gov.

Order Codes

Dial Size	2.5” (63mm)	4” (100mm)	6” (150mm)
Case Material	Plastic	Steel	
Connection	1/8” Bottom	1/4” Bottom	1/4” Bottom
30”/0/120 psi (retard 250)	PFG1730	PFG1734	PFG1738
30”/0/300 psi	PFG1731	PFG1735	PFG1739
0/500 psi	PFG1732	PFG1736	PFG1740

Other ranges and connection sizes available upon request. For scale change, refer to How to Order Guide for scale codes.
Blister packaging available.

2.5” Bottom Connection

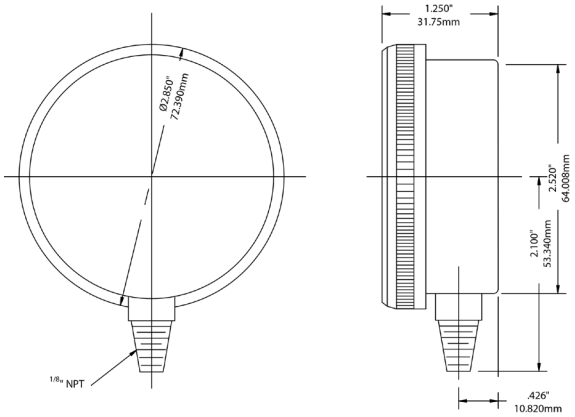

4” Bottom Connection

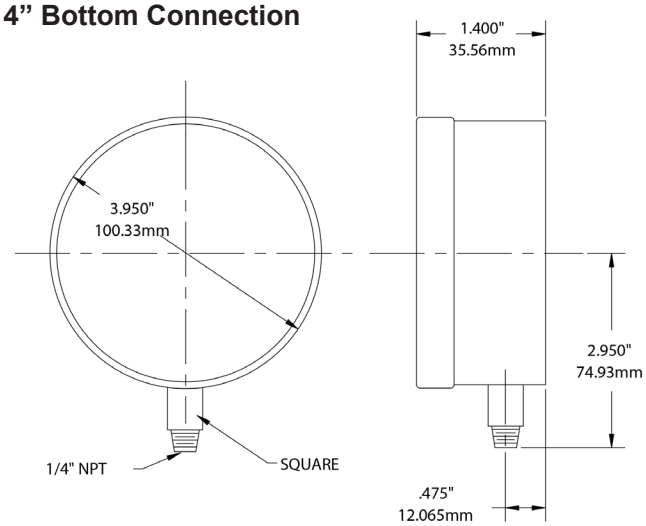

6” Bottom Connection

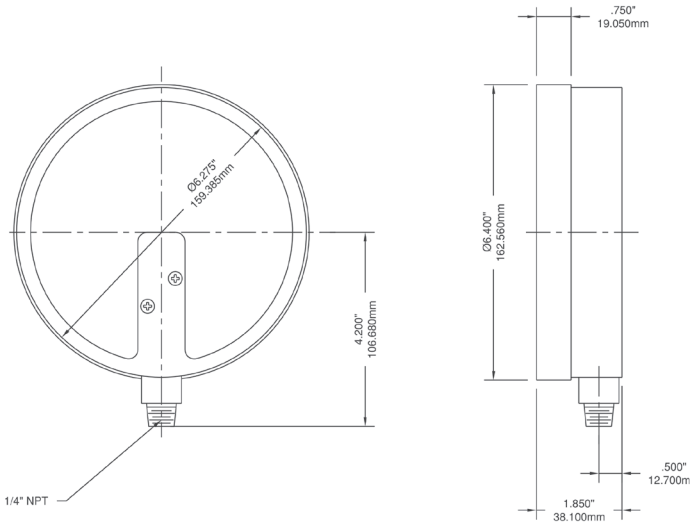

1. Bottom Connection
2. Back Connection

Description & Features:

- Highly accurate reading of low pressures
- Brass or stainless steel wetted parts
- Ranges from 15" H_2O/oz to 10 psi
- Over-pressure protection on some models (OP)
- ASME B40.100 compliant
- CRN registered
- 5 year warranty

Applications:

- Suitable for measuring gaseous media both corrosive and non-corrosive
- Used to measure natural gas pressure as well as air flow indication and leak detection
- Vacuum pumps, air compressors, air filters, gas burners, vacuum ovens, suction regulators and respirators

Specifications	Stainless Steel Internals	Brass Internals
Dial	2.5" (63mm), 4" (100mm), 4.5" (115mm) and 6" (150mm), white aluminum with black and red markings	2.5" (63mm), 4" (100mm), 4.5" (115mm) and 6" (150mm), white aluminum with black and red markings
Case	2.5" (63mm), 4" (100mm): AISI 304 SS 4.5" (115mm), 6" (150mm): Aluminum, painted black	2.5" (63mm), 4" (100mm): Steel, painted black 4.5" (115mm), 6" (150mm): Cast aluminum, painted black
Lens	2.5" (63mm): Polycarbonate 4" (100mm): Styrene-acrylonitrile resin 4.5" (115mm), 6" (150mm): Glass	2.5" (63mm), 4" (100mm): Polycarbonate 4.5" (115mm), 6" (150mm): Glass
Ring	2.5" (63mm), 4" (100mm): No ring 4.5" (115mm), 6" (150mm): Aluminum	2.5" (63mm): No ring 4" (100mm): Steel 4.5" (115mm), 6" (150mm): Aluminum
Socket	AISI 316 SS	Brass
Connection	1/4" NPT standard	1/4" NPT standard
Diaphragm Element	AISI 316 SS	Phosphor bronze
Movement	AISI 316 SS	2.5" (63mm): Engineering plastic upper and lower plate with brass pinion and sector; 4" (100mm), 4.5" (115mm), 6" (150mm): Brass
Pointer	Aluminum, anodized black	Aluminum, anodized black
Welding	TIG	Solder/brazed
Working Pressure	75% of full scale value	60% of full scale value (fluctuating) 75% of full scale value (static)
Over-pressure Limit	30% of full scale value	30% of full scale value, up to 200% with over-pressure protection (OP) option
Ambient/Process Temperature	-40°F to 150°F (-40°C to 65°C)	-40°F to 150°F (-40°C to 65°C)
Accuracy	±1.6% of full scale	±3-2-3% ANSI/ASME Grade B
Enclosure Rating	IP52	IP52
Warning (brass internals only)	N/A	**WARNING:** This product can expose you to chemicals including lead, which is known to the State of California to cause cancer and birth defects or other reproductive harm. For more information go to www.P65Warnings.ca.gov.

Order Codes (products in bold are normally stock in North America)

Dial Size	2.5” (63mm)			4” (100mm)				4.5” (115mm)			
Case Material	Steel		SS	Steel			SS	Aluminum			
Connection	1/4” Bottom	1/4” Back (CB)	1/4” Bottom	1/4” Bottom	1/4” Back (CB)	1/4” Back (CB)	1/4” Bottom	1/4” Bottom	1/4” Back (CB)	1/4” Bottom	1/4” Back (CB)
Capsule, Movement, Socket	Brass		SS	Brass		SS		Brass		SS	
0/15” water (vac)	PLP300V	PLP340V	PLP350V	PLP310V	PLP4230V	PLP4240V	PLP4200V	PLP4250V	PLP4290V	PLP4260V	PLP4300V
0/32” water (vac)	**PLP301V**	PLP341V	PLP351V	PLP311V	PLP4231V	PLP4241V	PLP4201V	PLP4251V	PLP4291V	PLP4261V	PLP4301V
0/55” water (vac)	PLP302V	PLP342V	PLP352V	PLP312V	PLP4232V	PLP4242V	PLP4202V	PLP4252V	PLP4292V	PLP4262V	PLP4302V
0/100” water (vac)	PLP304V	PLP343V	PLP353V	PLP313V	PLP4233V	PLP4243V	PLP4203V	PLP4253V	PLP4293V	PLP4263V	PLP4303V
0/200” water (vac)	PLP303V	-	PLP356V	-	-	-	-	-	-	-	-
0/15” water/oz	**PLP300**	**PLP340**	PLP350	PLP310	PLP4230	PLP4240	PLP4200	PLP4250	PLP4290	PLP4260	PLP4300
0/32” water/oz	**PLP301**	**PLP341**	PLP351	PLP311	PLP4231	PLP4241	PLP4201	PLP4251	PLP4291	PLP4261	PLP4301
0/55” water/oz	**PLP302**	**PLP342**	PLP352	PLP312	PLP4232	PLP4242	PLP4202	PLP4252	PLP4292	PLP4262	PLP4302
0/100” water/oz	**PLP304**	**PLP343**	PLP353	PLP313	PLP4233	PLP4243	PLP4203	PLP4253	PLP4293	PLP4263	PLP4303
0/200” water/oz	**PLP303**	PLP346	PLP356	PLP316	PLP4236	PLP4246	PLP4206	PLP4256	PLP4296	PLP4266	PLP4306
0/5 psi/kPa	**PLP305**	**PLP344**	PLP354	PLP314	PLP4234	PLP4244	PLP4204	PLP4254	PLP4294	PLP4264	PLP4304
0/10 psi/kPa	**PLP306**	PLP345	PLP355	PLP315	PLP4235	PLP4245	PLP4205	PLP4255	PLP4295	PLP4265	PLP4305

Dial Size	6” (150mm)			
Case Material	Aluminum			
Connection	1/4” Bottom	1/4” Back (CB)	1/4” Bottom	1/4” Back (CB)
Capsule, Movement, Socket	Brass		SS	
0/15” water (vac)	PLP4310V	-	PLP4320V	-
0/32” water (vac)	PLP4311V	-	PLP4321V	-
0/55” water (vac)	PLP4312V	-	PLP4322V	-
0/100” water (vac)	PLP4313V	-	PLP4323V	-
0/15” water/oz	PLP4310	-	PLP4320	PLP4360
0/32” water/oz	PLP4311	PLP4351	PLP4321	PLP4361
0/55” water/oz	PLP4312	-	PLP4322	-
0/100” water/oz	PLP4313	PLP4353	PLP4323	PLP4363
0/200” water/oz	PLP4316	-	PLP4326	-
0/5 psi/kPa	PLP4314	PLP4354	PLP4324	PLP4364
0/10 psi/kPa	PLP4315	PLP4355	PLP4325	PLP4365

Dial Size	2.5” (63mm)
Case Material	Steel
Connection	1/4” Bottom
Capsule, Movement, Socket	Brass w/Over-pressure protection
0/5 psi/kPa	PLP305OP
0/8 psi/kPa	**PLP307OP**
0/10 psi/kPa	PLP306OP

Description	Code
Test Block Only	EGT

Other ranges and connection sizes available upon request. For scale change, refer to How to Order Guide for scale codes. **For options, attach suffix to end of order code: i.e. PLP340-UC for U-CLAMP**

Option suffix:

3Y = 4” (100mm) PBT Enclosure
LPBF = Back flange (all sizes except 2.5” (63mm))
LPFF = 4.5” (115mm) Front flange
LPFF6 = 6” (150mm) Front flange
UC = 2.5” (63mm) U-clamp

2.5” Bottom Connection Brass

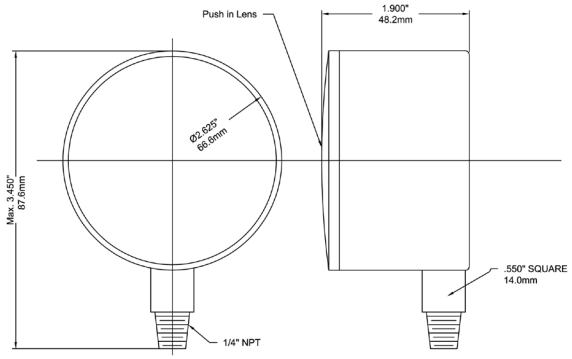

2.5” Back Connection Brass

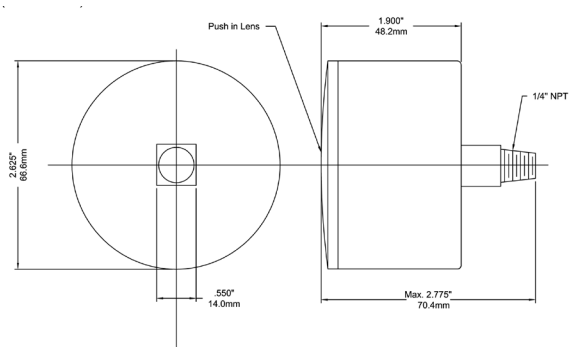

4” Bottom Connection Brass

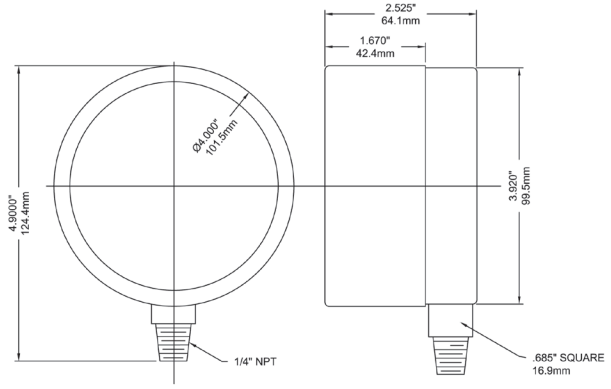

4” Back Connection Brass

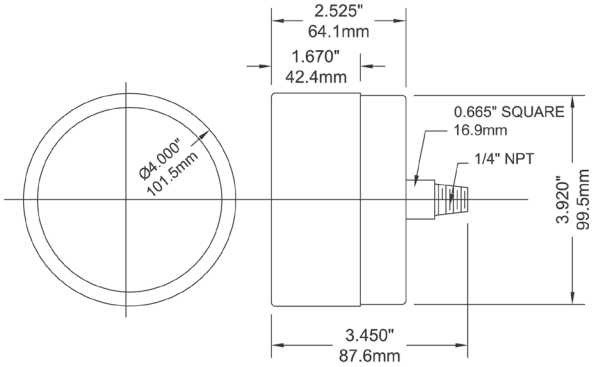

4.5” Bottom Connection Stainless Steel

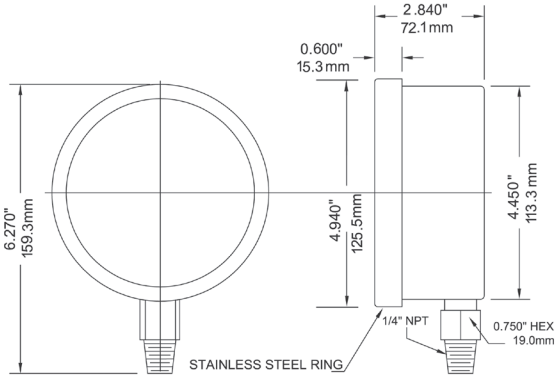

4.5” Back Connection Stainless Steel with Front Flange

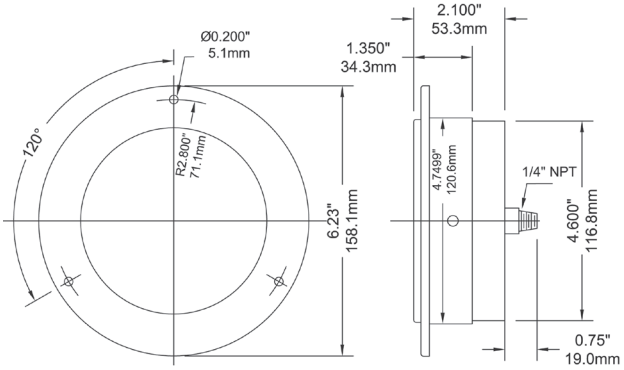

6” Bottom Connection Stainless Steel

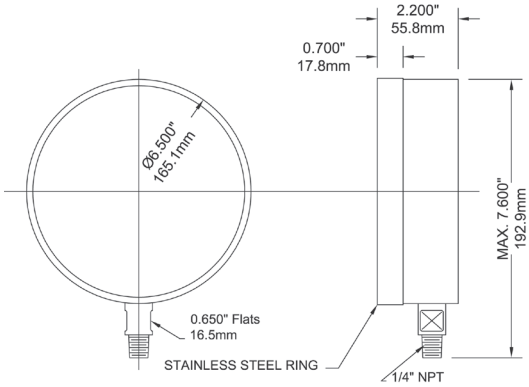

6” Back Connection Stainless Steel with Front Flange

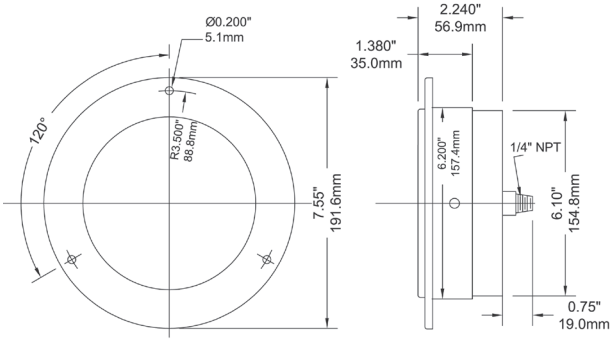

Test Block

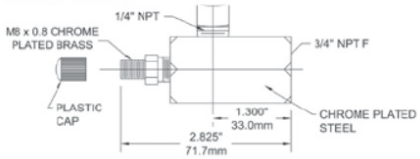

PET, PET-LF

Economy Test Gauge, Lead Free Economy Test Gauge

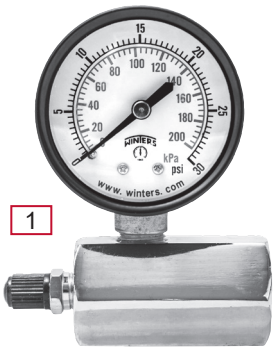

1. Gas Test Gauge
2. Water Test Gauge

Description & Features:

- Economical pressure gauge and valve body assembly used for pressure testing
- Bleed port and plated housing on the gas test assembly
- Swivel hose adaptor on the Water Test Gauge
- Black steel case
- Brass or lead free brass wetted parts
- Dual scale (PSI/kPa)
- ±3-2-3% accuracy
- ASME B40.100 compliant
- CRN registered
- Lead free version NSF-61-372 certified
- 5 year warranty

Applications:

- Residential & commercial pressure testing of natural gas, air and water lines
- Lead free version for potable water systems
- Suitable for non-clogging and non-corroding media

Specifications	
Dial	2” (50mm), 2.5” (63mm) white aluminum with black and red markings
Case	Steel painted black
Lens	PETG: Polycarbonate PETM, PETM-LF, PETW, PETW-LF: Acrylic
Ring	Steel, painted black
Bourdon Tube	PET: Phosphor bronze PET-LF: Lead free phosphor bronze, NSF-61-372 certified
Movement	PET: Brass, PET-LF: SS
Pointer	Aluminum, black
Connection	PETG: 3/4” NPTF PETM, PETM-LF, PETW, PETW-LF: 3/4” female swivel hose connection
Maximum Pointer	Available on Water Test Gauge only
Welding	#50 tin solder
Gas Test Ambient/Process Temperature	-40°F to 150°F (-40°C to 65°C)
Water Test Ambient/Process Temperature	32°F to 150°F (0°C to 65°C)
Working Pressure	Maximum 75% of full scale value
Accuracy	±3-2-3% ANSI/ASME Grade B
Enclosure Rating	IP52
Warning	⚠ **WARNING:** This product can expose you to chemicals including lead, which is known to the State of California to cause cancer and birth defects or other reproductive harm. For more information go to www.P65Warnings.ca.gov.

PET Order Codes (products in bold are normally stock in North America)

Product	Gas Test Gauge	Water Test Gauge	Maximum Pointer Water Test Gauge
Dial Size	2” (50mm)	2.5” (63mm)	2.5” (63mm)
Connection	Adapts to 3/4” NPTF	3/4” Female Swivel Hose Connection	3/4” Female Swivel Hose Connection
0/15 psi	**PETG201**	-	-
0/30 psi/kPa	**PETG202**	-	-
0/60 psi/kPa	**PETG203**	-	-
0/100 psi/kPa	**PETG204**	-	-
0/160 psi/kPa	PETG205	PETW213	**PETM213**
0/300 psi/kPa	-	**PETW217**	**PETM217**

PET-LF Order Codes (products in bold are normally stock in North America)

Product	Water Test Gauge	Maximum Pointer Water Test Gauge
Dial Size	2.5” (63mm)	2.5” (63mm)
Connection	3/4” Female Swivel Hose Connection	3/4” Female Swivel Hose Connection
0/160 psi/kPa	**PETW213LF**	**PETM213LF**
0/300 psi/kPa	**PETW217LF**	**PETM217LF**

Other ranges and connection sizes available upon request. For scale change, refer to How to Order Guide for scale codes.

2” Gas Test Gauge

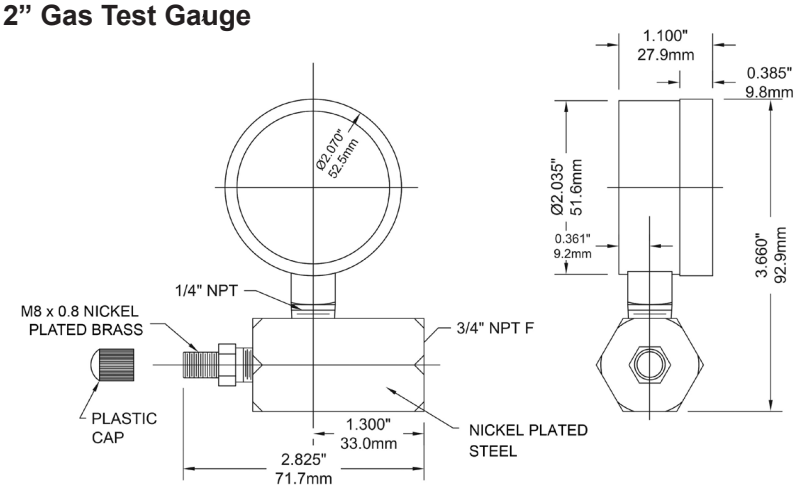

2.5” Water Test Gauge

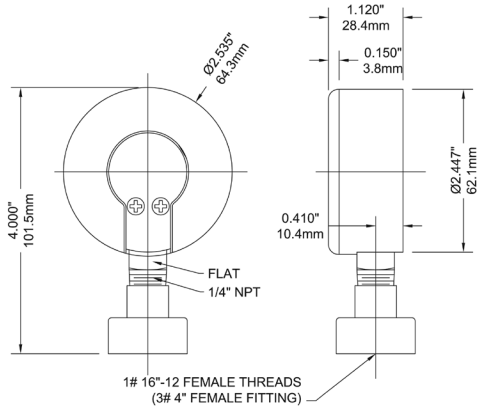

PLT Low Pressure Test Kit

Description & Features:

- Low pressure gauge built into protective case for ease in use and durability
- Sensitive diaphragm gauge available in 3 pressure ranges
- Re-zero with external recalibration screw (PLT35 only)
- Easier to use than a manometer
- Plastic blow molded case for added durability
- Sleek design featuring secure latch
- Facilitates safe handling
- ASME B40.100 compliant
- CRN registered
- 5 year warranty

Applications:

- Test kit for low pressure gas installations
- Suitable for non-clogging and non-corroding media

Gauge Specifications	
Dial	2.5” (63mm), white aluminum with red and black markings
Case/Ring	Steel, painted black
Lens	Polycarbonate
Connection	Brass hose barb (1/4”) (gear clamp included)
Diaphragm Element	Phosphor bronze
Movement	Engineering plastic upper and lower plate with brass pinion and sector, with zero adjustment*
Ambient Temperature	-40°F to 150°F (-40°C to 65°C)
Accuracy	±3-2-3% ANSI/ASME Grade B
Enclosure Rating	IP52
Warning	⚠ **WARNING:** This product can expose you to chemicals including lead, which is known to the State of California to cause cancer and birth defects or other reproductive harm. For more information go to www.P65Warnings.ca.gov.

Case and Accessory Specifications	
Tube Nipple	Rubber: 0.256” (6.5mm) ID x 0.472” (12mm) OD x 1.339” (34mm) 1/4” NPTM x 1/4” hose barb
Case Material	Plastic blow molded: 5.75” x 8.25” (146mm x 210mm)
Hose Tube	Rubber: 3’ (91cm) in length; 0.197” (5mm) ID x 0.315” (8mm) OD
Accessory	Easy to install clamp

Order Codes (products in bold are normally stock in North America)

Pressure Range	Code
0/15" water / 0/8 oz/in^2	PLT15
0/35" water / 0/20 oz/in^2	**PLT35**
0/100" water / 0/58 oz/in^2	PLT100

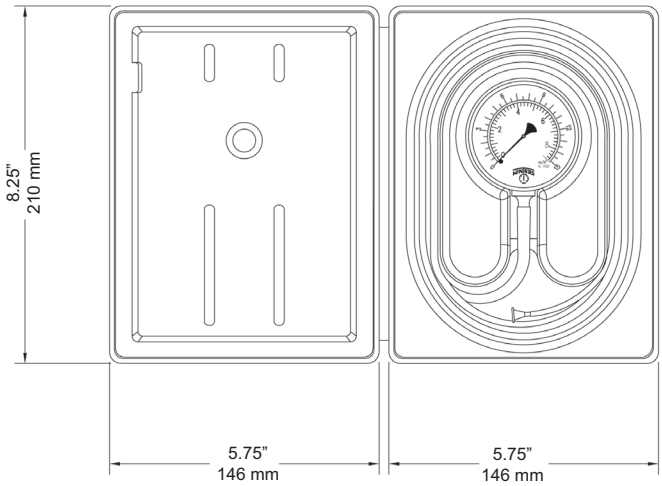

Kit Contents
1. Gauge
2. Gauge Adaptor
3. Bimetal Pocket Thermometer 0°F to 250°F (-17°C to 121°C)
4. Bimetal Pocket Thermometer -40°F to 160°F (-40°C to 71°C)
5. Carrying Case

Description & Features:

- A portable kit with durable carrying case to protect the test instruments between uses and test locations
- Includes two thermometers for high or low temperature tests
- Pressure gauge includes secondary adjustable set pointer to assist the operator in pressure test evaluations
- Hardened stainless steel gauge adaptor probe for test plug insertion
- Eliminates the need for costly, permanently installed pressure gauges or recording devices
- Multi-scale (psi/ft H_2O/kPa/meters H_2O) pressure gauge dial face for acceptance in a variety of applications
- CRN registered
- 5 year warranty

Applications:

- To determine pressure or temperature levels where test plugs are installed in the process
- Used at start-up or periodic testing of pipelines or pressure vessels
- Chilled and hot water systems, refrigeration and hydronics, pneumatics, prototype equipment, new building construction, building maintenance

Specifications	
Case	Black plastic with custom cut foam inserts for parts
Pressure Gauge	3.5” (90mm) dial, brass wetted, 0-100 psi/Ft H_2O/kPa/meters H_2O, 1/4” NPT bottom with attached gauge adaptor ±2-1-2% ANSI/ASME Grade A, red stationary pointer
Gauge Adaptor (picture #2)	1.75” (45mm) x 0.125” (3mm) SS probe with 1/4” NPTF swivel gauge fitting
Thermometer (picture #3)	1” (25mm) dial, 5” (127mm) x 0.142” (4mm) stem, includes plastic sheath ±1% accuracy Range: 0°F to 250°F (-17°C to 121°C)
Thermometer (picture #4)	1” (25mm) dial, 5” (127mm) x 0.142” (4mm) stem, includes plastic sheath ±1% accuracy Range: -40°F to 160°F (-40°C to 71°C)
Warning	⚠ **WARNING:** This product can expose you to chemicals including lead, which is known to the State of California to cause cancer and birth defects or other reproductive harm. For more information go to www.P65Warnings.ca.gov.

Order Codes

Kit Code
PTK1500

Pressure and Temperature Kit

Code	Specifications Pressure Gauge
P9S90223R99STAT	3.5”, 1/4 NPT bottom, 0/100 psi

Note: Contact Winters for gauges under 500 psi

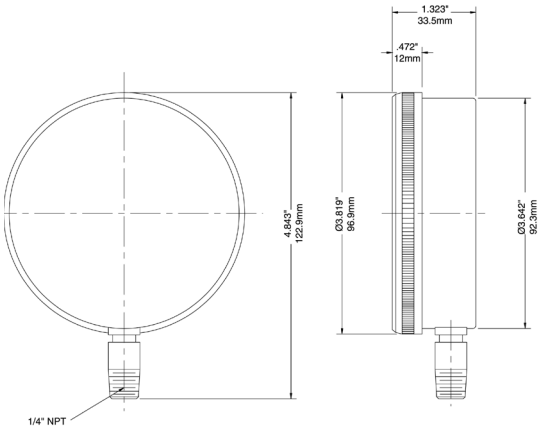

Code	Specifications Gauge Adaptor
STP003	2.75” x 1.75” x 0.125” probe

Optional Adaptor: STP004 = 2.25” x 1.75” x 0.125” probe

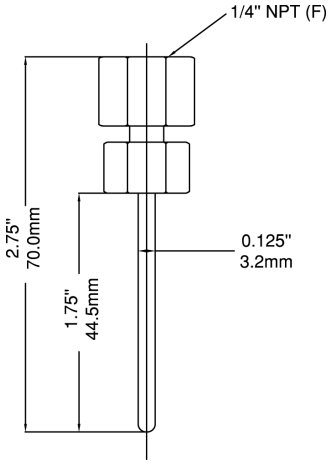

Bimetal Pocket Thermometer		
Product Code	Temperature Range	Specifications
TBM10050B15	-40°F to 160°F only	1” dial, 5” stem
TBM10050B19	0°F to 250°F only	1” dial, 5” stem

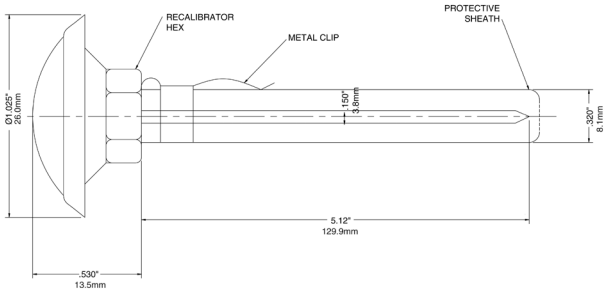

Optional Pocket Thermometers:
TBM10050B14 = -40° to 120°F (F only)
TBM10050B17 = 0° to 200°F (F only)
TBM10050B22 = 50° to 550°F (F only)
TBM10050B4 = -40° to 160°F (Dual scale)
TBM10050B8 = 0° to 250°F (Dual scale)
TBM10050B11 = 50° to 550°F (Dual scale)
TBM10050B12 = 150 to 750°F (Dual scale)
TBM10050B31 = -20° to 120°C (C only)
TBM10050B33 = 0° to 200°C (C only)

Description & Features:

- Developed for OEM applications
- Compact stainless steel construction with ceramic sensor
- Available ranges include Vac up to 8,700 psi (600 bar)
- Wide range of mechanical and electrical connections
- ±0.5% accuracy (±1% for pressures ≤ 45 psi)
- IP65 and IP67 enclosure ratings
- CE approved
- 5 year warranty

Applications:

- Suitable for all process and automation control, hydraulics and pneumatic sensing, pump and compressor monitoring, refrigeration and HVAC

Specifications	
Output Signal	Standard 2-wire: 4-20 mA / Vs = 12-30 Vdc Optional 3-wire: 0.5-4.5 Vdc / Vs = 10-30 Vdc / Vac
Accuracy	±0.5% FSO (±1% FSO for pressures ≤ 45 psi (3 bar))
Response Time	<10 ms
Insulation	>100 MΩ @ 50V
Permissible Temperatures	Operating: -40°F to 212°F (-40°C to 100°C) Compensating: 14°F to 176°F (-10°C to 80°C)
Pressure Port / Housing	304 SS
Wetted Parts	Seals: NBR Diaphragm: Ceramic
Current Consumption	2-wire: 25 mA max 3-wire voltage: 5 mA (short-circuit current 20 mA)
EMC	EMI: EN50081-1/-2 EMS: EN50082-2
Stability	Vibration: 10 g / 5 Hz to 200 Hz Shock: 20 g / 11 ms
Operation Life	2 M cycles
Approval	CE

Order Codes (products in bold are normally stock in North America)

Range	Over-pressure	Burst Pressure	Code
30” Hg Vac	15 psi	30 psi	LE130VC
30”/0/30 psi	45 psi	90 psi	LE10030
30”/0/60 psi	75 psi	150 psi	LE10060
30”/0/100 psi	150 psi	300 psi	LE10100
30”/0/150 psi	225 psi	450 psi	LE10150
0/15 psi	23 psi	45 psi	LE115
0/25 psi	38 psi	75 psi	LE125
0/50 psi	75 psi	150 psi	LE150
0/60 psi	90 psi	180 psi	LE160
0/100 psi	150 psi	300 psi	LE1100
0/150 psi	225 psi	450 psi	LE1150
0/200 psi	300 psi	600 psi	LE1200
0/300 psi	450 psi	900 psi	LE1300
0/500 psi	750 psi	1,500 psi	LE1500
0/1,000 psi	1,500 psi	3,000 psi	LE11000
0/2,000 psi	3,000 psi	6,000 psi	LE12000
0/3,000 psi	4,500 psi	9,000 psi	LE13000
0/5,000 psi	7,500 psi	15,000 psi	LE15000
0/5,800 psi	8,700 psi	17,400 psi	LE16000
0/7,250 psi	10,875 psi	21,750 psi	LE17500
0/8,700 psi	13,050 psi	26,100 psi	LE18500

Range	Over-pressure	Burst Pressure	Code
-1/0 bar	1 bar	2 bar	LE130VCR11
-1/3 bar	4.5 bar	9 bar	LE10030R11
-1/4 bar	6 bar	12 bar	LE10060R11
-1/6 bar	9 bar	18 bar	LE10100R11
-1/10 bar	15 bar	30 bar	LE10150R11
0/1 bar	2 bar	3 bar	LE115R11
0/1.6 bar	2 bar	5 bar	LE125R11
0/2.5 bar	4 bar	8 bar	LE150R11
0/4 bar	6 bar	12 bar	LE160R11
0/6 bar	9 bar	18 bar	LE1100R11
0/10 bar	15 bar	30 bar	LE1150R11
0/16 bar	24 bar	48 bar	LE1200R11
0/25 bar	38 bar	75 bar	LE1300R11
0/40 bar	60 bar	120 bar	LE1500R11
0/60 bar	90 bar	180 bar	LE11000R11
0/100 bar	150 bar	300 bar	LE12000R11
0/160 bar	240 bar	480 bar	LE13000R11
0/250 bar	375 bar	750 bar	LE15000R11
0/300 bar	450 bar	900 bar	LE15500R11
0/400 bar	600 bar	1,200 bar	LE16000R11
0/500 bar	750 bar	1,500 bar	LE17500R11
0/600 bar	900 bar	1,800 bar	LE18500R11

Electrical Connection

Micro

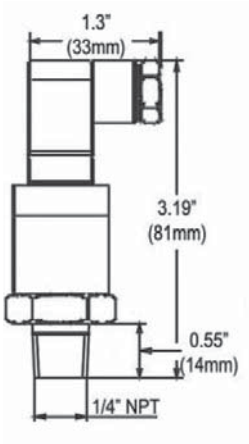

Packard

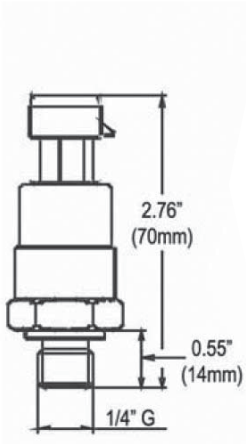

Cable Leads

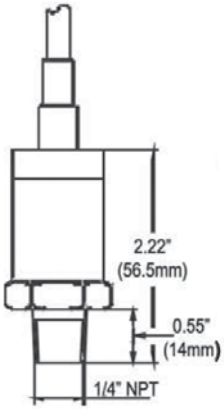

M12

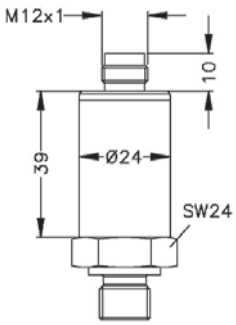

Mechanical Connection

Standard

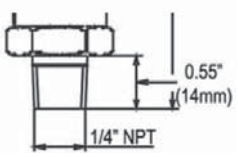

Optional

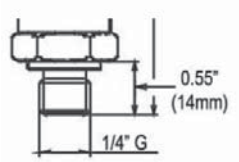

Wiring Diagram

Micro

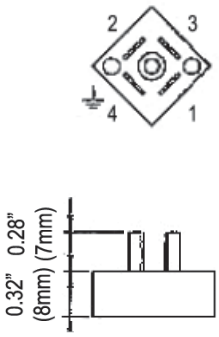

Packard

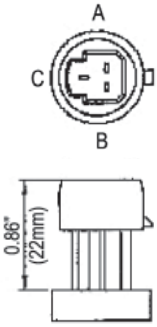

Cable Leads

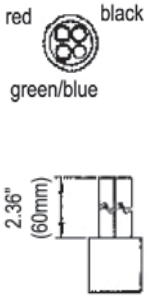

M12

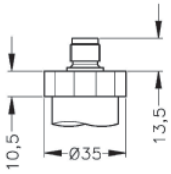

Micro			Packard			Cable Leads			M12	
Pin #:	2-wire (current):	3-wire (voltage):	Pin #:	2-wire (current):	3-wire (voltage):	Cable Colours:	2-wire (current):	3-wire (voltage):	Pin #:	Electrical Connection
1	Vcc	Vcc	A	No Connection	Ground	Red	Vcc	Vcc	1	Supply+
2	Iout	Ground	B	Vcc	Vcc	Green/Blue	Iout	Vout	2	Supply-
3	No Connection	Vout	C	Iout	Vout	Black	No Connection	Ground	3	Signal+ (for 3-wire)
4	Shield	Shield	-	-	-	Yellow	Shield	Shield	4	Shield

Description & Features:

- Developed for use in general industry and OEM applications, where versatility and economy are requirements
- Compact stainless steel construction with ceramic sensor
- Available ranges include in/Hg up to 5,000 psi
- Wide range of mechanical and electrical connections
- ±0.5% accuracy
- NEMA 4X / IP65 and IP67
- CE, CSA and RoHS compliant
- Approved for outdoor use
- Customizable
- 5 year warranty

Applications:

- Suitable for all process and automation control, hydraulics and pneumatic sensing, pump and compressor monitoring, refrigeration and HVAC

Specifications	
Output Signal	Standard 2-wire: 4-20 mA / Vs = 8-32 Vdc Optional 3-wire: 0-10 V / Vs = 14-30 Vdc Optional 3-wire ratiometric: Vsig = 0.5-4.5 Vs / Vs = 5 ± 0.5 Vdc
Accuracy	±0.5% FSO
Permissible Load	2-wire: Rmax = [(Vs - Vs min) / 0.02] Ohm 3-wire: Rmin = 10 kOhm
Influence Effects	Supply: 0.05% FSO / 10 V Load: 0.05% FSO / kOhm
Response Time	2-wire: <10 ms 3-wire: <3 ms
Measuring Rate	1 kHz
Thermal Error	<±0.5% FSO / 10K
Permissible Temperatures	Medium: -13°F to 257°F (-25°C to 125°C) Electronics environment: -13°F to 185°F (-25°C to 85°C) Storage: -40°F to 185°F (-40°C to 85°C)
Short-circuit Protection	Permanent 3-wire ratiometric: None
Reverse Polarity Protection	No damage. No function.
Electromagnetic Protection	Emission and immunity according to EN 61326
Stability	Vibration: 10 g, 25 Hz to 2 kHz according to DIN EN 60068-2-6 Shock: 500 g / 1 ms according to DIN EN 60068-2-27
Pollution Degree	4, electrical equipment for outdoor use
Pressure Port / Housing	304 SS
Wetted Parts	Seals: FKM Diaphragm: Ceramic Al_2O_3 96%
Weight	120 g
Current Consumption	2-wire: 25 mA max 3-wire voltage: 5 mA (short-circuit current 20 mA) 3-wire ratiometric: 1.5 mA
Long-term Stability	<±0.3% FSO/yr at reference conditions
Operation Life	>100 x 10^6 cycles
CE Conformity	EMC directive: 2004/108/EC Pressure equipment directive: 97/23/EC (module A). Valid for devices with max permissible overpressure > 3,000 psi

Order Codes (products in bold are normally stock in North America)

Range	Over-pressure	Burst Pressure	Code
30" Hg Vac	15 psi	44 psi	LE330VC
0/15 psi	15 psi	44 psi	LE315
0/25 psi	58 psi	102 psi	LE325
0/50 psi	58 psi	102 psi	LE350
0/60 psi	145 psi	218 psi	LE360
0/100 psi	145 psi	218 psi	LE3100
0/150 psi	290 psi	508 psi	LE3150
0/200 psi	580 psi	1,015 psi	LE3200
0/300 psi	580 psi	1,015 psi	LE3300
0/500 psi	1,450 psi	2,176 psi	LE3500
0/1,000 psi	1,450 psi	2,176 psi	LE31000
0/2,000 psi	2,901 psi	3,626 psi	LE32000
0/3,000 psi	5,802 psi	6,527 psi	LE33000
0/5,000 psi	5,802 psi	6,527 psi	LE35000

Note: Other connections available upon request

Electrical Connection

Standard **Optional**

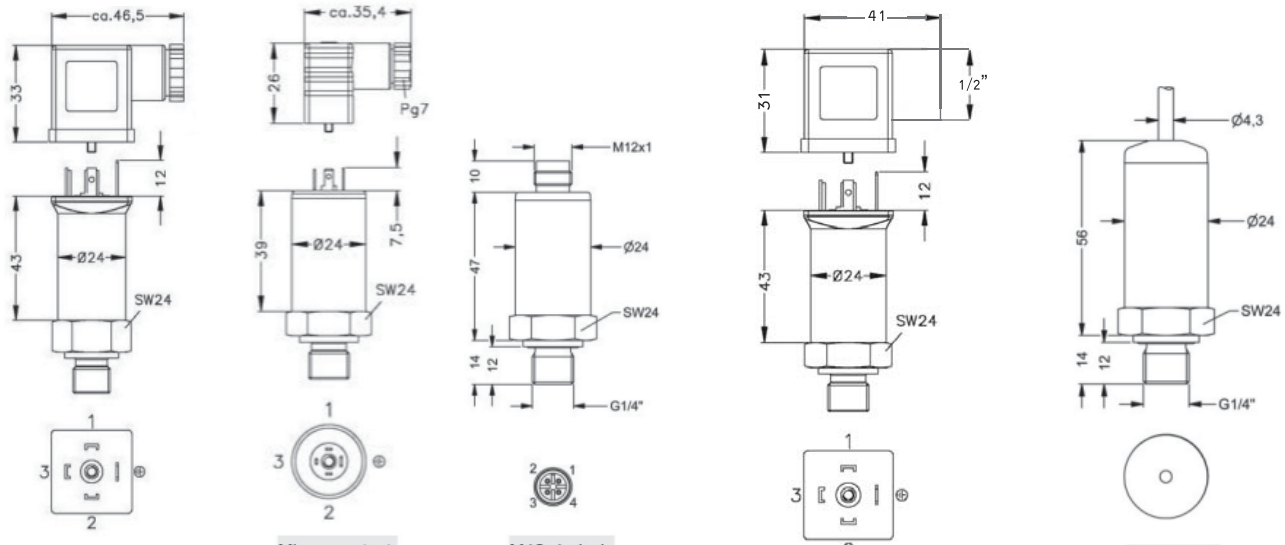

ISO 4400 (IP 65)

Micro. contact-distance 9.4 mm (IP 65)

M12x1. 4-pin (IP 67)

DIN 43650 A
1/2" NPTF conduit fitting

cable outlet with PVC-cable (IP 67)

Different cable types/lengths available

Mechanical Connection

Standard **Optional**

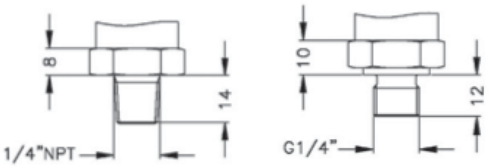

1/4" NPT

G1/4" DIN 3852

Wiring Diagram

Standard

2-wire-system (current)

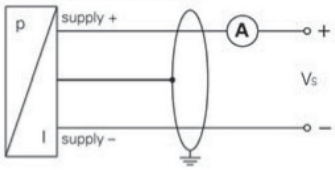

Optional

3-wire-system (voltage)

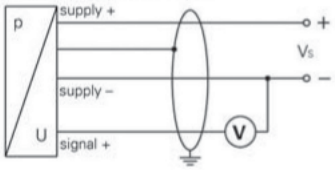

Note: Measurements are in mm

Pin Configuration				
Electrical Connection	ISO 4400	Micro (contact distance 9.4mm)	M12x1 (4 pin), plastic	Cable Colours (DIN 47100)
Supply+	1	1	1	White
Supply-	2	2	2	Brown
Signal+ (for 3-wire)	3	3	3	Green
Shield	Ground pin	Ground pin	4	Green/yellow

Description & Features:

- Universal transmitter with a high level of accuracy and stability
- Designed especially for aggressive media
- Rugged stainless steel construction with ceramic sensor
- Available ranges include in/Hg up to 8,700 psi
- Wide range of mechanical and electrical connections
- 0.5% FSO accuracy
- NEMA 4X and 6P / IP65, IP67 and IP68
- CE, CSA and RoHS compliant
- Approved for outdoor use
- Customizable
- 5 year warranty

Applications:

- Appropriate for environmental monitoring, machine tool and presses, test equipment and many other applications

Specifications	
Output Signal	Standard 2-wire: 4-20 mA / Vs = 8-32 Vdc I.S. protection: Vs = 14-28 Vdc Optional 3-wire: 0-20 mA / Vs = 14-30 Vdc 0-10 V / Vs = 14-30 Vdc
Accuracy	±0.5% FSO IEC 60770
Permissible Load	Current 2-wire: Rmax = [(Vs - Vs min) / 0.02] Ohm Current 3-wire: Rmax = 500 Ohm Voltage 3-wire: Rmin = 10 kOhm
Influence Effects	Supply: 0.05% FSO / 10 V Load: 0.05% FSO / kOhm
Response Time	≤10 ms
Thermal Error	≤±0.2% FSO / 10K In compensated range: -13°F to 185°F (-25°C to 85°C)
Permissible Temperatures	Medium: -40°F to 257°F (-40°C to 125°C) Electronics environment: -40°F to 185°F (-40°C to 85°C) Storage: -40°F to 212°F (-40°C to 100°C)
Short-circuit Protection	Permanent
Reverse Polarity Protection	No damage. No function.
Electromagnetic Protection	Emission and immunity according to EN 61326
Stability	Vibration: 10 g RMS (25 to 2,000 Hz) Shock: 500 g / 1 ms
Pollution Degree	4, electrical equipment for outdoor use
Housing	316L SS
Pressure Port	316L SS
Wetted Parts	Seals: P_N < 1,450 psi: FKM70. Others available. P_N > 1,450 psi: FKM90. Others available. Diaphragm: Ceramic Al_2O_3 96%

Order Codes

Range	Over-pressure	Burst Pressure	Code
30" Hg Vac	58 psi	102 psi	LIM428
0/15 psi	29 psi	58 psi	LIM429
0/20 psi	58 psi	73 psi	LIM435
0/35 psi	58 psi	73 psi	LIM445
0/60 psi	145 psi	174 psi	LIM447
0/85 psi	145 psi	174 psi	LIM448
0/145 psi	290 psi	363 psi	LIM449
0/230 psi	580 psi	725 psi	LIM450
0/360 psi	580 psi	725 psi	LIM451
0/580 psi	1,450 psi	1,740 psi	LIM452
0/870 psi	1,450 psi	1,740 psi	LIM453
0/1,500 psi	2,901 psi	3,626 psi	LIM454
0/2,300 psi	5,802 psi	7,252 psi	LIM455
0/3,600 psi	5,802 psi	7,252 psi	LIM456
0/5,800 psi	8,702 psi	9,427 psi	LIM457
0/8,700 psi	11,603 psi	12,763 psi	LIM458

Mechanical Connection

Standard

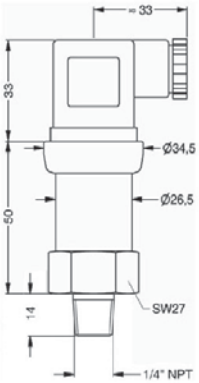

Optional

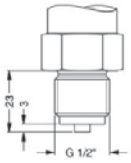

G1/2" EN 837

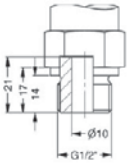

G1/2" open port

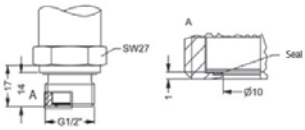

G1/2" semi-flush DIN 3852 ; M20x1.5 [1]
(up to 363 psi; nominal pressure abs, on request)

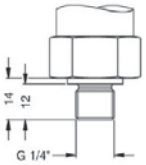

G1/4" DIN 3852

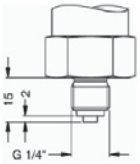

G1/4" EN 837

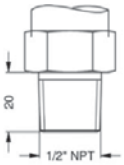

1/2" NPT

Electrical Connection

Standard

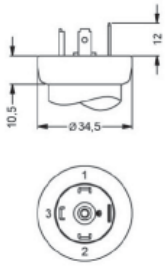

ISO 4400
(IP 65)

Optional

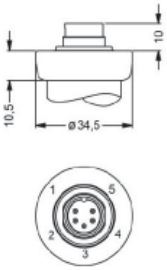

Binder Series 723 5 -pin
(IP 67)

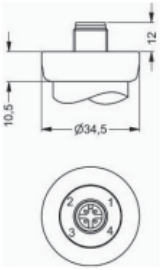

M12x1 4 -pin
(IP 67)

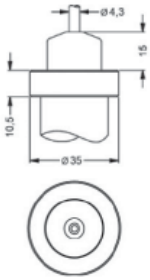

cable outlet with PVC cable
(IP 67) [2]

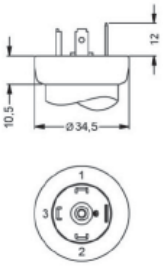

DIN 43650 A
1/2" NPTF conduit fitting

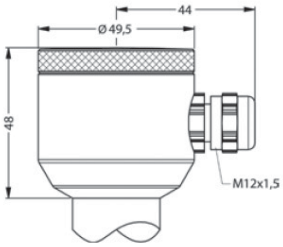

compact field housing
(IP 67)

Pin Configuration						
Electrical Connection		ISO 4400	Binder 723 (5-pin)	M12x1 (4-pin)	Field Housing	Cable Colours (DIN 47100)
2-wire system	Supply + Supply -	1 2	3 4	1 2	IN + IN -	White Brown
	Ground	Ground pin	5	4	⏚	Yellow/green (shield)
3-wire system	Supply + Supply - Signal +	1 2 3	3 4 1	1 2 3	IN + IN - OUT +	White Brown Green
	Ground	Ground pin	5	4	⏚	Yellow/green (shield)

Note: Measurements are in mm

[1] Possible for nominal pressure ranges ≤ 360 psi
[2] Standard: 2m PVC cable without ventilation tube.
Optional: Cable with ventilation tube

Wiring Diagram

Standard

2-wire-system (current)

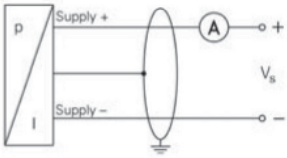

Optional

3-wire-system (current / voltage)

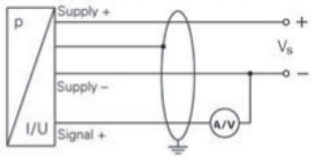

Description & Features:

- Approved for intrinsically-safe applications in Class 1/Div. 1 hazardous areas
- Rugged stainless steel construction with ceramic sensor
- Available ranges include in/Hg up to 8,700 psi
- Wide range of mechanical and electrical connections
- 0.5% FSO accuracy
- NEMA 4X and 6P / IP65, IP67 and IP68
- Approved for outdoor use
- Customizable
- 5 year warranty

Applications:

- Appropriate for all hazardous areas where an intrinsically safe rating is required, including oil & gas and chemical installations

Specifications	
Output Signal	Standard 2-wire: 4-20 mA / Vs = 8-32 Vdc I.S. protection: Vs = 14-28 Vdc Optional 3-wire: 0-20 mA / Vs = 14-30 Vdc 0-10 V / Vs = 14-30 Vdc
Accuracy	±0.5% FSO IEC 60770
Permissible Load	Current 2-wire: Rmax = [(Vs - Vs min) / 0.02] Ohm Current 3-wire: Rmax = 500 Ohm Voltage 3-wire: Rmin = 10 kOhm
Influence Effects	Supply: 0.05% FSO / 10 V Load: 0.05% FSO / kOhm
Response Time	≤10 ms
Thermal Error	≤±0.2% FSO / 10K In compensated range: -13°F to 185°F (-25°C to 85°C)
Permissible Temperatures	Medium: -40°F to 257°F (-40°C to 125°C) Electronics environment: -13°F to 185°F (-25°C to 85°C) Storage: -40°F to 212°F (-40°C to 100°C)
Short-circuit Protection	Permanent
Reverse Polarity Protection	No damage. No function.
Electromagnetic Protection	Emission and immunity according to EN 61326
I.S. Protection	Class 1, Div. 1, Groups A, B, C & D
Stability	Vibration: 10 g RMS (25 to 2,000 Hz) Shock: 500 g / 1 ms
Pollution Degree	4, electrical equipment for outdoor use
Housing	316L SS
Pressure Port	316L SS
Wetted Parts	Seals: P_N < 1,450 psi: FKM70. Others available. P_N > 1,450 psi: FKM90. Others available. Diaphragm: Ceramic Al_2O_3 96%

Weight	140 g
Current Consumption	Current: 25 mA max Voltage: 7 mA max
Operating Life	>100 x 10^6 cycles
Connecting Cables	Cable capacitance: Signal line/shield and signal line/ signal line: 160 pF/m Cable inductance: Signal line/shield and signal line/ signal line: 1 µH/m

Order Codes

Range	Over-pressure	Burst Pressure	Code
30" Hg Vac	58 psi	102 psi	LIS382
0/15 psi	29 psi	58 psi	LIS383
0/20 psi	58 psi	73 psi	LIS384
0/35 psi	58 psi	73 psi	LIS385
0/60 psi	145 psi	174 psi	LIS386
0/85 psi	145 psi	174 psi	LIS387
0/145 psi	290 psi	363 psi	LIS388
0/230 psi	580 psi	725 psi	LIS389
0/360 psi	580 psi	725 psi	LIS390
0/580 psi	1,450 psi	1,740 psi	LIS391
0/870 psi	1,450 psi	1,740 psi	LIS392
0/1,500 psi	2,901 psi	3,626 psi	LIS393
0/2,300 psi	5,802 psi	7,252 psi	LIS394
0/3,600 psi	5,802 psi	7,252 psi	LIS395
0/5,800 psi	8,702 psi	9,427 psi	LIS396
0/8,700 psi	11,603 psi	12,763 psi	LIS397

Note: Intrinsically safe approval only applies to 4-20mA output signal

Mechanical Connection

Standard

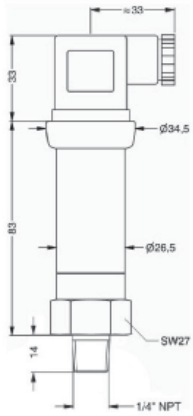

Optional

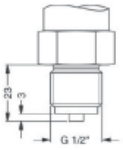

G1/2" EN 837

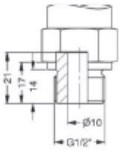

G1/2" open port

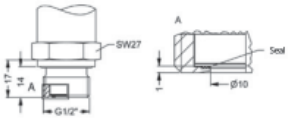

G1/2" semi-flush DIN 3852 ; M20x1.5 [1]
(up to 363 psi; nominal pressure abs, on request)

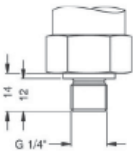

G1/4" DIN 3852

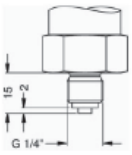

G1/4" EN 837

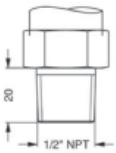

1/2" NPT

Electrical Connection

Standard

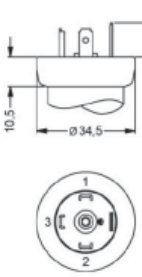

ISO 4400
(IP 65)

Optional

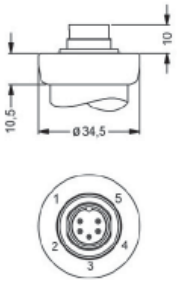

Binder Series 723 5 -pin
(IP 67)

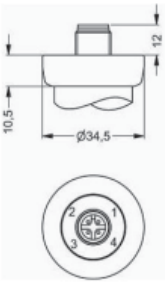

M12x1 4 -pin
(IP 67)

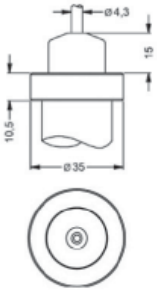

cable outlet with PVC cable
(IP 67) [2]

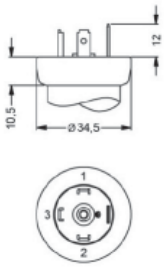

DIN 43650 A
1/2" NPTF conduit fitting

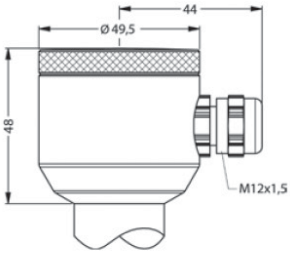

compact field housing
(IP 67)

Pin Configuration						
Electrical Connection		ISO 4400	Binder 723 (5-pin)	M12x1 (4-pin)	Field Housing	Cable Colours (DIN 47100)
2-wire system	Supply + Supply -	1 2	3 4	1 2	IN + IN -	White Brown
	Ground	Ground pin	5	4	⏚	Yellow/green (shield)
3-wire system	Supply + Supply - Signal +	1 2 3	3 4 1	1 2 3	IN + IN - OUT +	White Brown Green
	Ground	Ground pin	5	4	⏚	Yellow/green (shield)

Note: Measurements are in mm

[1] Possible for nominal pressure ranges ≤ 360 psi
[2] Standard: 2m PVC cable without ventilation tube.
Optional: Cable with ventilation tube

Wiring Diagram

Standard

2-wire-system (current)

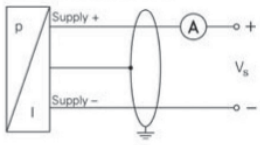

Optional

3-wire-system (current / voltage)

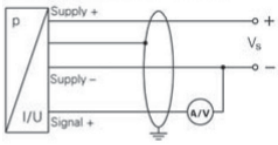

Description & Features:

- Compact stainless steel construction with stainless steel sensor
- Available in in/H_2O to 25 psi
- Wide range of mechanical and electrical connections
- ±0.5% accuracy
- NEMA 4X and 6P / IP65, IP67 and IP68
- CE and RoHS compliant
- Customizable
- 5 year warranty

Applications:

- Developed for low pressure applications in general industry and OEM applications

Specifications	
Output Signal	Standard 2-wire: 4-20 mA / Vs = 8-32 Vdc Optional 3-wire: 0-10 V / Vs = 14-30 Vdc Optional 3-wire ratiometric: Vsig = 0.5-4.5 V / Vs = 5 ± 0.5 Vdc
Accuracy	±0.5% FSO
Permissible Load	2-wire: Rmax = [(Vs - Vs min) / 0.02] Ohm 3-wire: Rmin = 10 kOhm
Influence Effects	Supply: 0.05% FSO / 10 V Load: 0.05% FSO / kOhm
Response Time	2-wire: <10 ms 3-wire: <3 ms
Measuring Rate	1 kHz
Thermal Error	<±0.3% FSO / 10K in compensated range 32°F to 158°F (0°C to 70°C)
Permissible Temperatures	Medium: -13°F to 185°F (-25°C to 85°C) Electronics environment: -13°F to 185°F (-25°C to 85°C) Storage: -40°F to 185°F (-40°C to 85°C)
Short-circuit Protection	Permanent 3-wire ratiometric: None
Reverse Polarity Protection	No damage. No function.
Electromagnetic Protection	Emission and immunity according to EN 61326
Stability	Vibration: 10 g, 25 Hz to 2 kHz according to DIN EN 60068-2-6 Shock: 100 g / 1 ms according to DIN EN 60068-2-27
Pressure Port / Housing	304 SS
Wetted Parts	Seals: FKM Diaphragm: 316L SS
Weight	120 g
Current Consumption	2-wire: 25 mA max 3-wire voltage: 5 mA (short-circuit current 20 mA) 3-wire ratiometric: 1.5 mA
CE Conformity	EMC directive: 2004/108/EC

Order Codes

Range	Over-pressure	Burst Pressure	Code
0/1.5 psi (42" H_2O)	15 psi	22 psi	LLP0001
0/2 psi (55" H_2O)	15 psi	22 psi	LLP0002
0/3 psi (83" H_2O)	15 psi	22 psi	LLP0003
0/5 psi (138" H_2O)	15 psi	22 psi	LLP0005
0/10 psi	44 psi	73 psi	LLP0010
0/15 psi	44 psi	73 psi	LLP0015
0/25 psi	87 psi	145 psi	LLP0025

Electrical Connection

Standard **Optional**

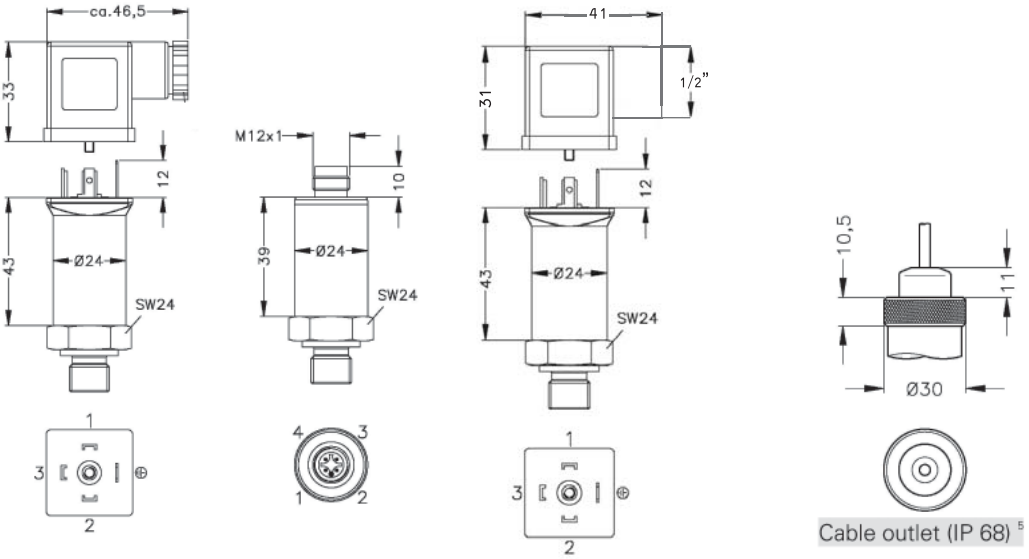

ISO 4400 (IP 65)

M12x1, 4-pin (IP 67)

DIN 43650 A
1/2" NPTF conduit fitting

Cable outlet (IP 68) [5]

5 Different cable types/lengths available

Mechanical Connection

Standard **Optional**

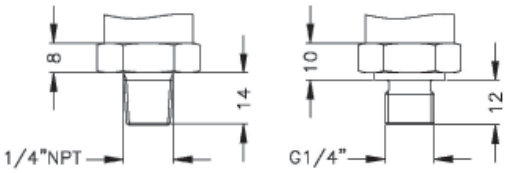

1/4" NPT

G1/4" DIN 3852

Note: Measurements are in mm

Wiring Diagram

Standard

2-wire-system (current)

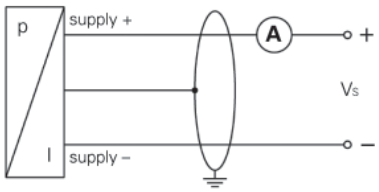

Optional

3-wire-system (voltage)

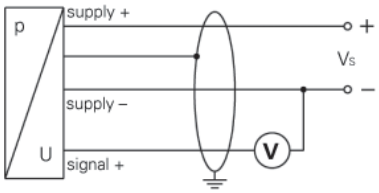

Pin Configuration			
Electrical Connection	ISO 4400	M12x1 (4 pin), plastic	Cable Colours (DIN 47100)
Supply+	1	1	White
Supply-	2	2	Brown
Signal+ (for 3-wire)	3	3	Green
Shield	Ground pin	4	Green/yellow

Description & Features:

- Heavy-duty submersible transmitter for level measurement in sludge and slurry installations
- 316L SS housing with anti-clogging sensor and reinforced diaphragm seal
- Standard ranges from 2 thru 50 psi, optional ranges from up to 140 psi
- ±0.25% accuracy
- 33' (10m) of vented cable standard, other lengths also available
- NEMA 6P / IP68 for full immersion
- 5 year warranty

Applications:

- Manufactured for level measurement in sludge and slurry installations including lifting stations

Specifications	
Output Signal	Standard 2-wire: 4-20 mA / Vs = 10-36 Vdc Optional 3-wire: 0-5 V / Vs = 10-36 Vdc 3-wire: 0-10 V / Vs = 10-36 Vdc
Accuracy	Standard: ±0.25% FSO Optional: ±0.5% FSO
Response Time	<10 ms
Permissible Temperature	Operating: -40°F to 185°F (-40°C to 85°C)
Reverse Polarity Protection	No damage. No function.
Electromagnetic Compatibility	EN50081-1/2
Housing	316L SS
Pressure Port	Flush mount
Diaphragm	316L SS w/1Cr18Ni9Ti
Electrical Connector	1/2" NPTM submersible conduit
Lightning Protection	Lifetime
Enclosure Rating	NEMA 6P/IP68

Order Codes

Range psi ("H_2O)	Over-pressure	Burst Pressure	Code
0/2 psi (0/55)	3 psi	6 psi	LM1002
0/5 psi (0/138)	7.5 psi	15 psi	LM1005
0/10 psi (0/277)	15 psi	30 psi	LM1010
0/15 psi (0/415)	22.5 psi	45 psi	LM1015
0/25 psi (0/692)	37.5 psi	75 psi	LM1025
0/30 psi (0/830)	45 psi	90 psi	LM1030
0/50 psi (0/1,384)	75 psi	150 psi	LM1050

Other scales available on request.

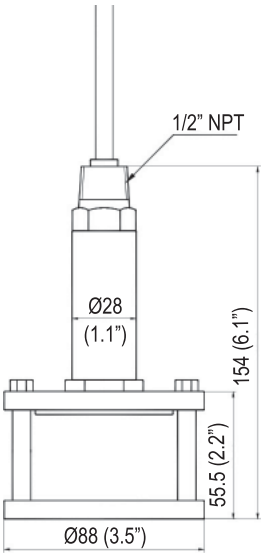

Note: Polyurethane cable standard, PTFE optional

Pin Configuration		
Electrical Connection		Cable Colours
2-wire system	Power V+ Signal Output Shield	Red Green/Blue Yellow
3-wire system	Power V+ Signal Output Ground Shield	Red Green/Blue Black Yellow

Wiring Diagram

Standard

2-wire-system (current)

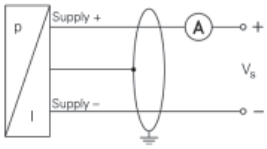

Optional

3-wire-system (current / voltage)

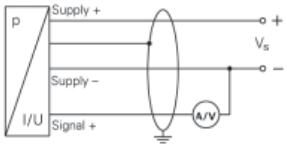

Transmitters

LM6 All Stainless Steel Submersible Transmitter

Description & Features:

- Designed for continuous level measurement in water or other liquids with low viscosity
- 316L SS probe with stainless steel sensor for ease of cleaning
- Available ranges from H_2O up to 300 psi
- ±0.1% to ±0.35% accuracy ratings
- NEMA 6P / IP68. Approved for outdoor use
- Customizable
- 5 year warranty

Applications:

- Typical installations include ground or tank level monitoring of water and sewage treatment measurement

Specifications	
Output Signal	Standard 2-wire: 4-20 mA / Vs = 8-32 Vdc Optional 3-wire: 0-20 mA / Vs = 14-30 Vdc 0-10 V / Vs = 14-30 Vdc
Accuracy	±0.35% FSO Optional nominal pressure ≥ 5 psi: ≤±0.25% FSO BFSL All nominal pressure <±0.1% FSO BFSL
Permissible Load	Current 2-wire: Rmax = [(Vs - Vs min) / 0.02] Ohm Current 3-wire: Rmax = 500 Ohm Voltage 3-wire: Rmin = 10 kOhm
Influence Effects	Supply: 0.05% FSO / 10 V Load: 0.05% FSO / kOhm
Long-term Stability	<±0.1% FSO/yr
Response Time	≤10 ms*
Permissible Temperatures	Medium: 14°F to 158°F (-10°C to 70°C) Storage: -13°F to 158°F (-25°C to 70°C)
Reverse Polarity Protection	No damage. No function.
Electromagnetic Compatibility	Emission and immunity according to EN 61326
Electrical Connection	Cable with sheath material**: PVC grey, PUR black, FEP black, others available
Pollution Degree	4, electrical equipment for outdoor use
Housing	316L SS
Seals	FKM, others available
Diaphragm	316L SS
Weight	200 g (without cable)
Current Consumption	Current: 25 mA max Voltage: 7 mA max
Connecting Cables	Cable capacitance: Signal line/shield and signal line/signal line: 160 pF/m Cable inductance: Signal line/shield and signal line/signal line: 1 µH/m
Enclosure Rating	NEMA 6P / IP68

* With optional accuracy 0.1% FSO the response time is 200 ms

** Cable with integrated air tube for atmospheric pressure reference

Note: Measurements are in mm. Total length of devices with accuracy 0.1% FSO IEC 60770 increases by 35mm. Cable not included (specify type and length)

Order Codes

Range	Over-pressure	Burst Pressure	Code
0/50" water	7 psi	22 psi	LM6W05
0/100" water	15 psi	22 psi	LM6W10
0/150" water	29 psi	44 psi	LM6W15
0/200" water	29 psi	44 psi	LM6W20
0/300" water	73 psi	109 psi	LM6W30
0/400" water	73 psi	109 psi	LM6W40
0/5 psi	15 psi	22 psi	LM6005
0/10 psi	73 psi	109 psi	LM6010
0/15 psi	73 psi	109 psi	LM6015
0/25 psi	145 psi	218 psi	LM6025
0/50 psi	145 psi	218 psi	LM6050
0/100 psi	580 psi	725 psi	LM6100
0/200 psi	580 psi	725 psi	LM6200
0/300 psi	1,160 psi	1,740 psi	LM6300

Thermal Errors (Offset and Span)		
Nominal Pressure (psi)	<5	>5
Tolerance Band (% FSO)	<±1	<±0.75
Compensated Range	32°F to 158°F 0°C to 70°C	

Pin Configuration		
Electrical Connection		Cable Colours (DIN 47100)
2-wire system	Supply + Supply -	White Brown
	Ground	Yellow/green (shield)
3-wire system	Supply + Supply - Signal +	White Brown Green
	Ground	Yellow/green (shield)

Wiring Diagram

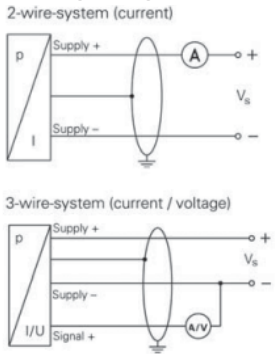

Description & Features:

- Designed for continuous level measurement in water or wastewater (thin film)
- Good linearity for long term stability
- Available ranges up to 300 psi
- Wide range of mechanical and electrical connections
- ±0.5% accuracy
- NEMA 6P / IP68. Approved for outdoor use
- Customizable
- 5 year warranty

Applications:

- Appropriate for all level and depth measurement applications including open tanks, ground water monitoring, sewage and water treatment facilities

Specifications	
Output Signal	Standard 2-wire: 4-20 mA / Vs = 8-32 Vdc Optional 3-wire: 0-20 mA / Vs = 14-30 Vdc 0-10 V / Vs = 14-30 Vdc
Accuracy	≤±0.5% FSO
Permissible Load	Current 2-wire: Rmax = [(Vs - Vs min) / 0.02] Ohm Current 3-wire: Rmax = 500 Ohm Voltage 3-wire: Rmin = 10 kOhm
Influence Effects	Supply: 0.05% FSO / 10 V Load: 0.05% FSO / kOhm
Response Time	≤10 ms
Thermal Error	≤±0.2% FSO / 10K
Permissible Temperatures	Medium: 14°F to 158°F (-10°C to 70°C) Storage: -13°F to 158°F (-25°C to 70°C)
Short Circuit Protection	Permanent
Reverse Polarity Protection	No damage. No function.
Electromagnetic Protection	Emission and immunity according to EN 61326
Connecting Cables	Cable capacitance: Signal line/shield and signal line/ signal line: 160 pF/m Cable inductance: Signal line/shield and signal line/ signal line: 1 µH/m
Electrical Connection	Cable with sheath material: PVC grey, PUR black, FEP black
Pollution Degree	4, electrical equipment for outdoor use
Housing	316L SS
Seals	FKM / EPDM
Diaphragm	Ceramic Al_2O_3 96%
Protection Cap	POM
Current Consumption	Current: 25 mA max Voltage: 7 mA max
Weight	250 g (without cable)
Enclosure Rating	NEMA 6P / IP68
CE Conformity	EMC directive: 2004/108/EC

Order Codes

Range	Over-pressure	Burst Pressure	Code
0/8 psi	9 psi	58 psi	LM7008
0/15 psi	29 psi	58 psi	LM7015
0/20 psi	58 psi	73 psi	LM7020
0/35 psi	58 psi	73 psi	LM7035
0/60 psi	145 psi	174 psi	LM7060
0/100 psi	145 psi	174 psi	LM7100
0/160 psi	290 psi	363 psi	LM7160
0/200 psi	580 psi	725 psi	LM7200
0/300 psi	580 psi	725 psi	LM7300

Pin Configuration	
Electrical Connection	Cable Colours (DIN 47100)
Supply + Supply - Signal + (only 3-wire)	White Brown Green
Shield	Yellow/green

Wiring Diagram

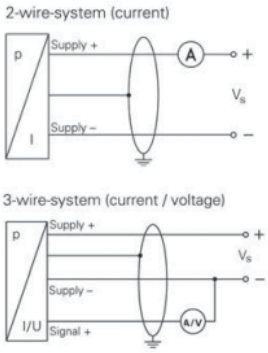

Note: Measurements are in mm. Cable not included (specify type and length)

Transmitters

LMH Hydraulic Transmitter

Description & Features:

- Developed for use in heavy duty industrial applications
- Compact stainless steel construction with welded stainless steel sensor
- Available ranges up to 8,700 psi
- Wide range of mechanical and electrical connections
- ±0.5% accuracy
- NEMA 4X / IP65 and IP67
- CE and RoHS compliant
- Customizable
- 5 year warranty

Applications:

- Suitable for heavy duty process and automation control including mobile hydraulics and presses

Specifications	
Output Signal	Standard 2-wire: 4-20 mA / Vs = 8-32 Vdc Optional 3-wire: 0-10 V / Vs = 14-30 Vdc Optional 3-wire ratiometric: Vsig = 0.5-4.5 Vs / Vs = 5 ± 0.5 Vdc
Accuracy	±0.5% FSO
Permissible Load	2-wire: Rmax = [(Vs - Vs min) / 0.02] Ohm 3-wire: Rmin = 10 kOhm
Influence Effects	Supply: 0.05% FSO / 10 V Load: 0.05% FSO / kOhm
Response Time	2-wire: ≤10 ms 3-wire: ≤3 ms
Measuring Rate	1 kHz
Thermal Error	<±0.3% FSO / 10K, Compensated range 32°F to 158°F (0°C to 70°C)
Permissible Temperatures	Medium: -40°F to 257°F (-40°C to 125°C) Electronics environment: -40°F to 185°F (-40°C to 85°C) Storage: -40°F to 185°F (-40°C to 85°C)
Short-circuit Protection	Permanent 3-wire ratiometric: None
Reverse Polarity Protection	No damage. No function.
Electromagnetic Protection	Emission and immunity according to EN 61326
Stability	Vibration: 20 g, 25 Hz to 2 kHz according to DIN EN 60068-2-6 Shock: 500 g / 1 ms according to DIN EN 60068-2-27
Pressure Port	316Ti SS
Pressure Port Connection	1/4” NPT (others available upon request)
Housing	304 SS
Diaphragm	17-4PH SS, welded
Weight	120 g
Current Consumption	2-wire: 25 mA max 3-wire voltage: 5 mA (short-circuit current 20 mA) 3-wire ratiometric: 3 mA
Long-term Stability	<±0.3% FSO/yr at reference conditions
Operating Life	>100 x 10^6 cycles
CE Conformity	EMC directive: 2004/108/EC Pressure equipment directive: 97/23/EC (module A). Valid for devices with max permissible overpressure > 3,000 psi

Order Codes

Range	Over-pressure	Burst Pressure	Code
0/100 psi	203 psi	406 psi	LMH0100
0/145 psi	508 psi	1,015 psi	LMH0145
0/230 psi	508 psi	1,015 psi	LMH0230
0/360 psi	1,015 psi	2,030 psi	LMH0360
0/580 psi	2,030 psi	4,060 psi	LMH0580
0/870 psi	2,030 psi	4,060 psi	LMH0870
0/1,500 psi	5,075 psi	10,150 psi	LMH1500
0/2,300 psi	5,075 psi	10,150 psi	LMH2300
0/3,600 psi	10,150 psi	20,305 psi	LMH3600
0/5,800 psi	17,405 psi	21,755 psi	LMH5800
0/8,700 psi	17,405 psi	21,755 psi	LMH8700

Electrical Connection

Standard **Optional**

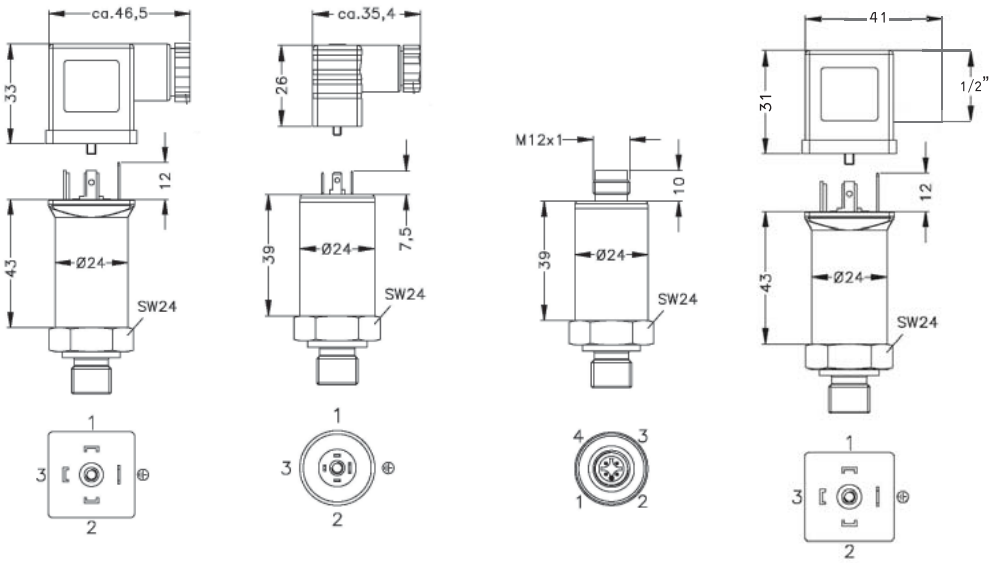

ISO 4400 (IP 65)

Micro, contact distance 9.4 mm (IP 65)

M12x1, 4-pin (IP 67)

DIN 43650 A
1/2" NPTF conduit fitting

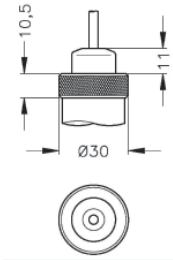

Cable outlet (IP 68) [5]

5 Different cable types/lengths available

Note: Other connections available upon request

Mechanical Connection

Standard **Optional**

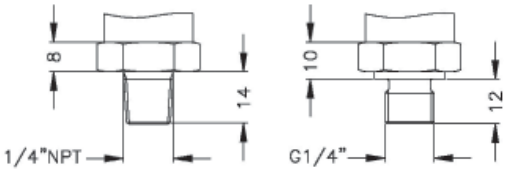

1/4" NPT

G1/4" DIN 3852

Note: Measurements are in mm

Wiring Diagram

Standard

2-wire-system (current)

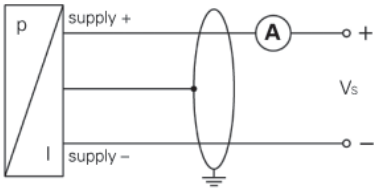

Optional

3-wire-system (voltage)

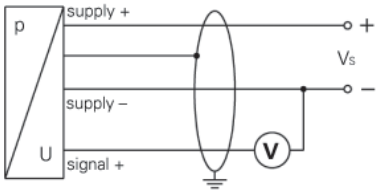

Pin Configuration				
Electrical Connection	ISO 4400	Micro (contact distance 9.4mm)	M12x1 (4 pin), plastic	Cable Colours (DIN 47100)
Supply+	1	1	1	White
Supply-	2	2	2	Brown
Signal+ (for 3-wire)	3	3	3	Green
Shield	Ground pin	Ground pin	4	Green/yellow

LST 3A Sanitary Transmitter

Description & Features:

- Constructed of 316 and 316L welded stainless steel, NEMA 4X rated
- 3A approved
- Excellent accuracy rating of ±0.25% full scale output
- Available with a 0.5” (13mm) to 5” (127mm) Tri-Clamp®
- Pressure ranges 0/3 to 1,000 psi
- 5 year warranty

Applications:

- Designed for all sanitary applications including food & beverage, dairy, pharmaceutical and biotechnical
- Built to withstand the harshest of sanitary applications and where 3A approval is required
- For gas, air, liquid, pasty or powdery media

Specifications	
Electrical Output Signal	4-20mA, 2 wire (optional 0/5 Vdc, 3 wire)
Electrical Connection	10’ (3m) cable, flying leads
Excitation Voltage	8-38 Vdc
Accuracy	±0.25% ANSI/ASME Grade 3A
EMI/RFI Enclosure Rating	Meets and exceeds CE standards
Wetted Parts / Connection	316L SS Tri-Clamp®
Housing	316 SS
Enclosure Rating	NEMA 4X (IP65)
Proof Pressure	2X full scale
Burst Pressure	5X full scale (maximum 3,000 psi)
Normal Operating Temperature Range	-40°F to 200°F (-40°C to 93°C)
Long Term Stability	≤ 0.25%/yr
Weight	10 oz (283 g)

Order Codes

Range	1.5” Tri-Clamp®	2” Tri-Clamp®
0/200 psi	LST15200	LST20200
0/300 psi	LST15300	LST20300
0/500 psi	LST15500	LST20500
0/750 psi	LST15750	LST20750
0/1,000 psi	LST151000	LST201000

Note: Other ranges (e.g. kPa, bar, etc.), outputs and options available upon request.

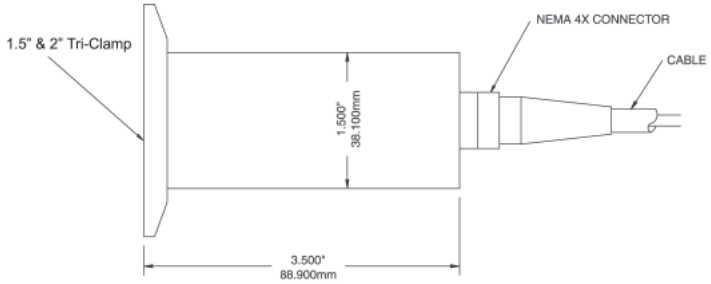

Wiring			
Output	+Power	-Power	+Signal
0/5 Vdc, 3 wire	Red Pin 1	Black Pin 2	Green Pin 3
4/20 mA, 2 wire	Red Pin 1	-	Black Pin 2

Tri-Clamp® is a registered trademark of Tri-Clover, Inc.

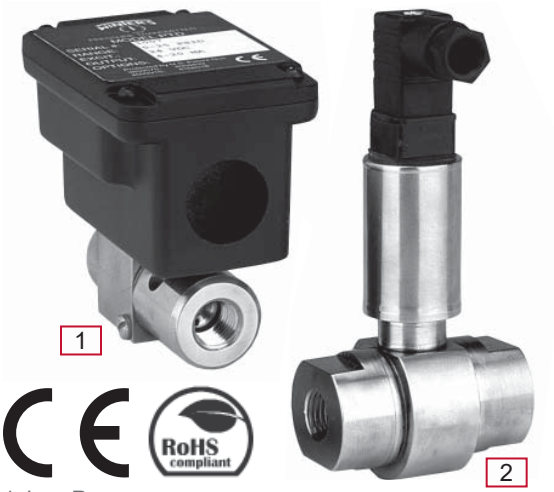

1. Low Range
2. High Range

Description & Features:

- Designed to measure the differential pressures of liquids and gases between two ports
- Compact, efficient design available in Low or High psi ranges that facilitates installation in tight spaces
- Low Range housing is constructed of stainless steel and aluminum
- High Range housing is made from a 316-grade stainless steel ideally suited for an industrial environment
- Fast response sensor and signal conditioned electronic circuitry provide quick and accurate readings
- Unique isolation system responds to pressure changes approximately 20 times faster than conventional transmitters with ranges below 100 psi (Low Range model)
- CE approval is standard on all models
- NEMA 4 approval is standard on the Low Range model
- 5 year warranty

Applications:

- To measure pressure drops across filters
- Pumps and compressors, flow measurements of gases and liquids, liquid level measurement of pressurized vessels

Specifications	Low Range	High Range
Electrical Output	4-20 mA, 2 wire 0-5 Vdc or 0-10 Vdc	4-20 mA, 2 wire (other options available)
Electrical Connection	Barrier strip terminal block with conduit enclosure and 0.875 dia. conduit opening	DIN 43650 with mate
Excitation Voltage	9-30 Vdc	8-38 Vdc
Wetted Parts / Connection	17-4PH SS with FKM O-ring, 1/4”-18 NPTF	316L SS, 1/4” NPTF 300 series SS, 17-4PH SS with FKM O-ring
Housing	304 SS, cast aluminum	316L SS
Proof Pressure	Refer to pressure range chart on next page	Refer to pressure range chart on next page (20X full scale optional)
Burst Pressure	Refer to pressure range chart on next page	Refer to pressure range chart on next page
Normal Operating Temperature Range	0°F to 175°F (-17°C to 79°C)	-40°F to 200°F (-40°C to 93°C)
Compensated Temperature Range	30°F to 150°F (0°C to 65°C)	0°F to 170°F (-18°C to 76°C)
Ambient Temperature Effect on Zero / Span	±2% of full scale/100°F (37.7°C)	≤ ±1.5% FSO over compensated range
Response Time	30-50 ms	<50 ms
Long Term Stability	±0.5% FSO/yr	≤±0.25% FSO/yr
Weight	14.4 oz. (408 g)	13 oz. (368 g)
Accuracy	±0.25% FSO	±0.25% FSO
Enclosure Rating	IP65	IP65

LTD Low Range					
Uni-directional			Bi-directional		
Gauge psid	Proof Pressure psi	Burst Pressure psi	Gauge psid	Proof Pressure psi	Burst Pressure psi
0/1	2.5	20	0/±0.5	1.25	20
0/2	5	40	0/ ±1	2.5	40
0/5	12.5	100	0/±2.5	6.25	100
0/10	25	100	0/±5	12.5	100
0/25	62.5	250	0/±10	25	200
0/50	125	250	0/±25	62.5	250
0/100	250	250	0/±50	125	250

LTD High Range		
Gauge psid	Proof Pressure psi	Burst Pressure psi
0/50	100	750
0/100	200	1,000
0/200	500	2,000
0/500	1,000	3,000
0/1,000	2,000	5,000
0/3,000	4,500	7,500
0/5,000	7,500	10,000

Order Codes

Low Range Uni-directional	
Range	Code
0/1 (27.7in/H_2O)	LTDU1
0/2 (55.4in/H_2O)	LTDU2
0/5 (138.4in/H_2O)	LTDU5
0/10 (276.8in/H_2O)	LTDU10
0/25 psi	LTDU25
0/50 psi	LTDU50
0/100 psi	LTDU100

Low Range Bi-directional	
Range	Code
±0/0.5 (13in/H_2O)	LTDB0.5
±0/1 (27.7in/H_2O)	LTDB1
±0/2.5 (69in/H_2O)	LTDB2.5
±0/5 (138.4in/H_2O)	LTDB5
±0/10 (276.8in/H_2O)	LTDB10
±0/25 psi	LTDB25
±0/50 psi	LTDB50

High Range	
Range	Code
0/150 psid	LTD150
0/200 psid	LTD200
0/300 psid	LTD300
0/500 psid	LTD500
0/1,000 psid	LTD1000
0/3,000 psid	LTD3000
0/5,000 psid	LTD5000

Option suffix:
4WCABLE = 4 wire shielded data cable (per ft.)

Other ranges (e.g. bar, etc.) available upon request
Other outputs and options available upon request

Definitions:

- Uni-directional = The instrument is calibrated with a 4 mA output at 0 psid and 20 mA output at full scale (i.e. For 0-10 psid range: 4 mA = 0 psid and 20 mA = 10 psid)
- Bi-directional = The instrument is calibrated with a 12 mA output at 0 psid/zero centre (i.e. For 0-10 psid range: 4 mA = -5 psid, 12 mA = 0 psid and 20 mA = +5 psid)

Low Range

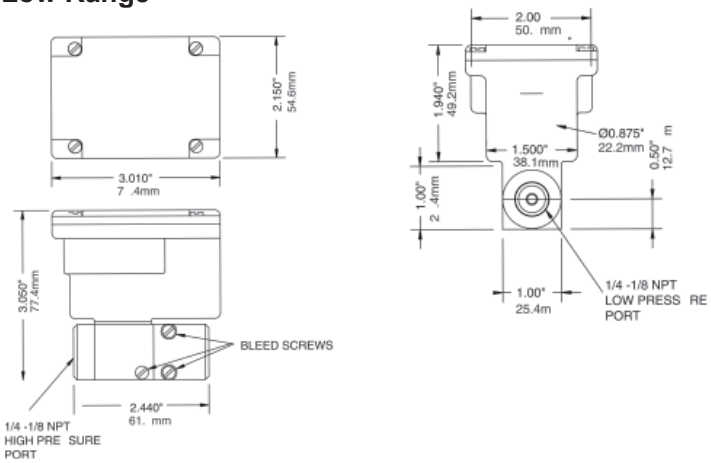

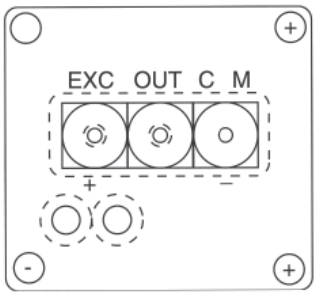

- For voltage output, use COM, OUT and EXC terminals
- For current (4-20 mA) output, use + and - terminals

High Range

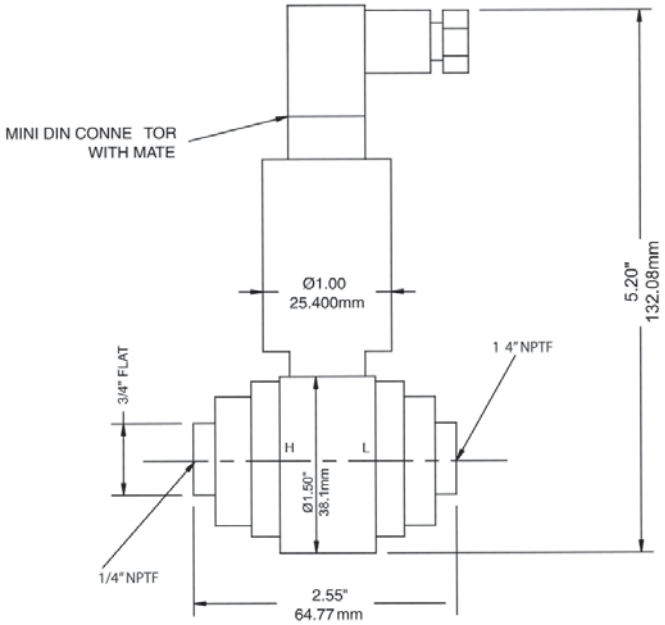

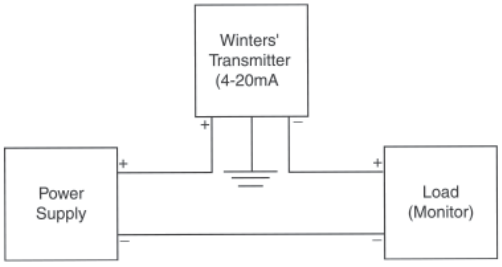

Hirschmann® is a registered trademark of Hirschmann Laborgeräte GmbH & Co.

Hirschmann® Mini-Din Pin Out:

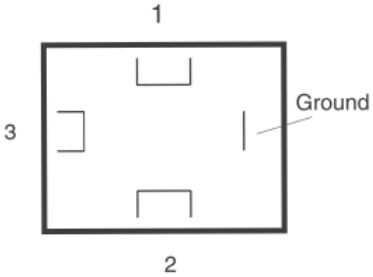

4-20mA output Supply Power: 8-38 Vdc			
Mini-Din Connection			
Pin	Colour Code	V	mA
1	N/A	+Excitation	+Excitation/Signal
2	N/A	-Excitation/Signal	-Excitation/Signal
3	N/A	+ Signal	NC
Grnd	N/A	Gnd	Gnd
Wire Lead Connection			
Wiring	Colour Code	V	mA
1	Red	+Excitation	+Excitation/Signal
1	Black	-Excitation/Signal	-Excitation/Signal
1	Green	+ Signal	NC
Grnd	Shield/White	Gnd	Gnd

Current Output Units

- Low Range (current output) transducers are true 2-wire, 4-20 mA current output devices
- Deliver rated current into any external load of 0-1000 ohms
- 4-20 mA current output units are designed to have current flow in one direction only. Please observe polarity
- An electrical cable shield should be connected to the system's loop circuit ground to improve electrical noise rejection

MIN Supply Voltage: 9 + 0.02 x (Resistance of receiver plus line)
MAX Supply Voltage: 30 + 0.004 x (Resistance of receiver plus line)

LTF Flush Mount Transmitter

Description & Features:

- Unique flush stainless steel diaphragm eliminates any cavity that could form a build-up
- 316-grade thick diaphragm provides higher overpressure and spike protection
- Available ranges include vacuum up to 5,800 psi
- Wide range of mechanical and electrical connections
- Cooling tower option for increased temperature tolerance
- Optional FDA-approved food-compatible oil
- ±0.50% accuracy
- NEMA 4X and NEMA 6P / IP65 and IP67
- Customizable
- 5 year warranty

Applications:

- Best utilized in conjunction with viscous fluids or media which may clog a standard process connection, e.g. chemical & process engineering, food industry and pulp & paper and mining

Specifications	
Output Signal	Standard 2-wire: 4-20 mA / Vs = 8-32 Vdc Optional 3-wire: 0-20 mA / Vs = 14-30 Vdc 0-10 V / Vs = 14-30 Vdc
Accuracy	±0.50% FSO
Permissible Load	Current 2-wire: Rmax = [(Vs - Vs min) / 0.02] Ohm Current 3-wire: Rmax = 500 Ohm Voltage 3-wire: Rmin = 10 kOhm
Influence Effects	Supply: 0.05% FSO / 10 V Load: 0.05% FSO / kOhm
Long-term Stability	≤±0.3% FSO/yr at reference conditions
Response Time	2-wire: ≤10 ms 3-wire: ≤3 ms
Thermal Error[1]	≤±0.2% FSO / 10K In compensated range: -4°F to 185°F (-20°C to 85°C)
Permissible Temperatures[2]	Medium: -40°F to 257°F (-40°C to 125°C) silicon oil 14°F to 257°F (-10°C to 125°C) food grade oil Electronics environment: -40°F to 185°F (-40°C to 85°C) Storage: -40°F to 212°F (-40°C to 100°C)
Permissible Temperature for Cooling Element 572°F (300°C)	Silicon oil overpressure: -40°F to 572°F (-40°C to 300°C) Silicon oil vacuum: -40°F to 302°F (-40°C to 150°C) Food grade oil overpressure: 14°F to 482°F (-10°C to 250°C) Food grade oil vacuum: 14°F to 302°F (-10°C to 150°C)
Short-circuit Protection	Permanent
Reverse Polarity Protection	No damage. No function.
Electromagnetic Compatibility	Emission and immunity according to EN 61326
Stability	Vibration: 20 g RMS (25 to 2,000 Hz) Shock: 500 g / 1 ms
Filling Fluids	Standard: Silicon oil Optional FDA approved: Mobil SHL Cibus 32, Category Code: H1; NSF reg no. 141500, others available
Housing	316L SS
Pressure Port	316L SS
Wetted Parts	Seals: FKM, others available
Current Consumption	Current: 25 mA max Voltage: 7 mA max

Weight	200 g min
Operating Life	>100 x 10^6 cycles
Connecting Cables	Cable capacitance: Signal line/shield and signal line/signal line: 160 pF/m Cable inductance: Signal line/shield and signal line/signal line: 1 µH/m
Enclosure Rating	NEMA 4X and NEMA 6P / IP65 and IP67
CE Conformity	EMC directive: 2004/108/EC

Order Codes

Range	Over-pressure	Burst Pressure	Code
30" Hg Vac	73 psi	109 psi	LTF30VC
0/15 psi	73 psi	109 psi	LTF0015
0/20 psi	145 psi	218 psi	LTF0020
0/35 psi	145 psi	218 psi	LTF0035
0/60 psi	254 psi	363 psi	LTF0060
0/85 psi	508 psi	725 psi	LTF0085
0/145 psi	508 psi	725 psi	LTF0145
0/230 psi	1,160 psi	1,740 psi	LTF0230
0/360 psi	1,160 psi	1,740 psi	LTF0360
0/580 psi	1,523 psi	3,046 psi	LTF0580
0/870 psi	1,450 psi	1,740 psi	LTF0870
0/1,500 psi	2,901 psi	3,626 psi	LTF1500
0/2,300 psi	5,802 psi	7,252 psi	LTF2300
0/3,600 psi	5,802 psi	7,252 psi	LTF3600
0/5,800 psi	8,702 psi	9,427 psi	LTF5800

1 An optional cooling element can influence thermal effects for offset and span depending on installation position and filling conditions
2 Max temperature of the medium for overpressure>0 psi: 302°F (150°C) for 60mins with max environmental temp of 122°F (50°C)

Mechanical Connection

Standard **Optional**

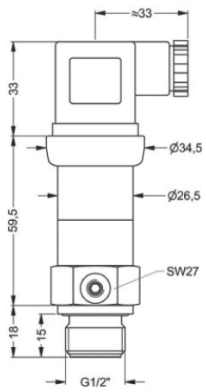

G1/2" flush DIN 3852

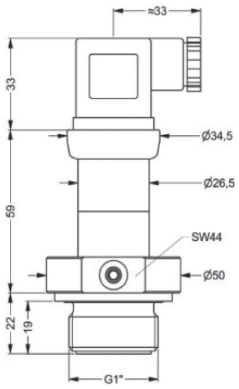

G1" flush DIN 3852

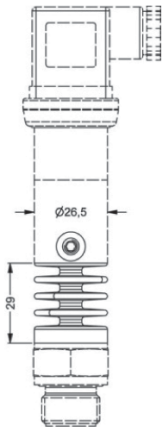

cooling element
300 °C

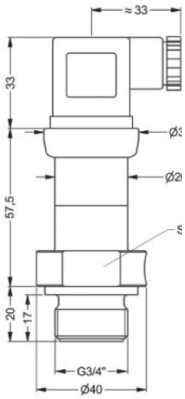

G3/4" flush DIN 3852

Electrical Connection

Standard **Optional**

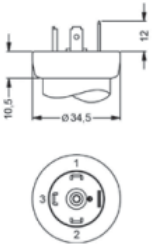

ISO 4400
(IP 65)

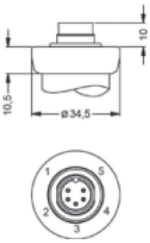

Binder Series 723 5 -pin
(IP 67)

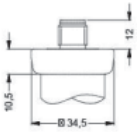

M12x1 4 -pin
(IP 67)

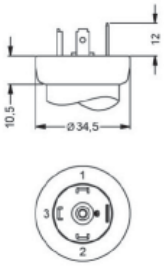

DIN 43650 A
1/2" NPTF conduit fitting

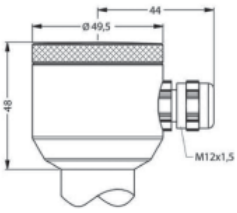

compact field housing
(IP 67)

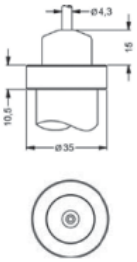

cable outlet with PVC cable
(IP 67) [1]

Pin Configuration					
Electrical Connection	ISO 4400	Binder 723 (5-pin)	M12x1 (4-pin)	Field Housing	Cable Colours (DIN 47100)
Supply+ Supply- Signal+ (for 3-wire)	1 2 3	3 4 1	1 2 3	IN+ IN- OUT+	White Brown Green
Shield	Ground pin	5	4	⏚	Yellow/green

Note: Measurements are in mm

1 Standard: 2m PVC cable without ventilation tube

Wiring Diagram

Standard

2-wire-system (current)

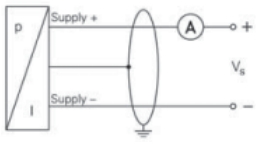

Optional

3-wire-system (current / voltage)

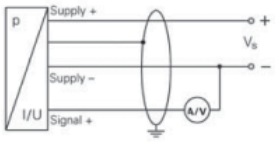

LXP Explosion Proof Transmitter

Description & Features:

- Vac to 10,000 psi pressure range
- Explosion proof enclosure
- Rugged stainless steel construction with diffused silicone sensor
- Built in high pressure snubber (2,000 psi and above)
- NEMA 4X, 7 and 9
- ±0.25% accuracy
- cULus approved for hazardous locations
- Single seal ANSI compliant up to 6,000 psi
- CRN registered
- 5 year warranty

Applications:

- Suitable for a variety of hazardous applications where the added security of an explosion proof enclosure is required including petrochemical plants, pipelines, fuel transfer systems and power plants
- Also appropriate for oil & gas, mining and water treatment industries

Specifications	
Output Signal	Standard 2-wire: 4-20 mA / Vs = 12-28 Vdc Optional 3-wire: 0.5-5.5 Vdc / Vs = 9-28 Vdc 3-wire: 1-11 Vdc / Vs = 14-28 Vdc Note: Other output signals available
Accuracy	±0.25% BFSL / ±0.5% for vacuum only
Temperature Ranges	Operating: -40°F to 160°F (-40°C to 71°C) Compensating: 30°F to 160°F (-1°C to 71°C) Storage: -40°F to 185°F (-40°C to 85°C)
Temperature Shift	0.0125% per °F over compensated range 75°F (24°C) reference
Vibration	15 g / 10 to 2,000 Hz (MIL-STD-202)
Shock	50 g / 11 ms (MIL-STD-202, M213, Cond. G)
Pressure Connection	1/4" NPTM, 1/2" NPTM optional
Housing	304 SS
Wetted Parts	316 SS diaphragm and 17-4PH SS process connection
Proof Pressure	2 x rated pressure or 13,000 psi max
Current Supply	3 mA maximum (no load)
Protection	EMI, ESD and RFI, reverse polarity protected
Approval	cULus approved as telemetering equipment for use in hazardous locations (UL File E146589, WYMV, WYMV7) as follows: Class I, Div. 1, Groups A, B, C & D Class II, Div. 1, Groups E, F & G CRN registered
Weight	7.4 oz. (210 grams): ≤1,000 psi 9.9 oz. (281 grams): ≥2,000 psi

Order Codes

Range	Proof Pressure	Process Connection	
		1/4”	1/2”
30” Hg Vac	30 psi	LXPSV1N4	LXPSV1N2
30”/0/15 psi	30 psi	LXPSV2N4	LXPSV2N2
30”/0/30 psi	60 psi	LXPSV3N4	LXPSV3N2
30”/0/60 psi	120 psi	LXPSV4N4	LXPSV4N2
30”/0/100 psi	200 psi	LXPSV5N4	LXPSV5N2
30”/0/150 psi	300 psi	LXPSV6N4	LXPSV6N2
30”/0/200 psi	400 psi	LXPSV7N4	LXPSV7N2
30”/0/300 psi	600 psi	LXPSV8N4	LXPSV8N2
0/15 psi	30 psi	LXPS15N4	LXPS15N2
0/30 psi	60 psi	LXPS30N4	LXPS30N2
0/60 psi	120 psi	LXPS60N4	LXPS60N2
0/100 psi	200 psi	LXPS1HN4	LXPS1HN2
0/150 psi	300 psi	LXPS2HN4	LXPS2HN2
0/200 psi	400 psi	LXPS3HN4	LXPS3HN2
0/300 psi	600 psi	LXPS4HN4	LXPS4HN2
0/500 psi	1,000 psi	LXPS5HN4	LXPS5HN2
0/600 psi	1,200 psi	LXPS6HN4	LXPS6HN2
0/1,000 psi	2,000 psi	LXPS1TN4	LXPS1TN2
0/1,500 psi	3,000 psi	LXPS2TN4	LXPS2TN2
0/2,000 psi	4,000 psi	LXPS3TN4	LXPS3TN2
0/3,000 psi	6,000 psi	LXPS4TN4	LXPS4TN2
0/4,000 psi	8,000 psi	LXPS5TN4	LXPS5TN2
0/5,000 psi	10,000 psi	LXPS6TN4	LXPS6TN2
0/6,000 psi	12,000 psi	LXPS7TN4	LXPS7TN2
0/7,500 psi	13,000 psi	LXPS8TN4	LXPS8TN2
0/10,000 psi	13,000 psi	LXPS9TN4	LXPS9TN2

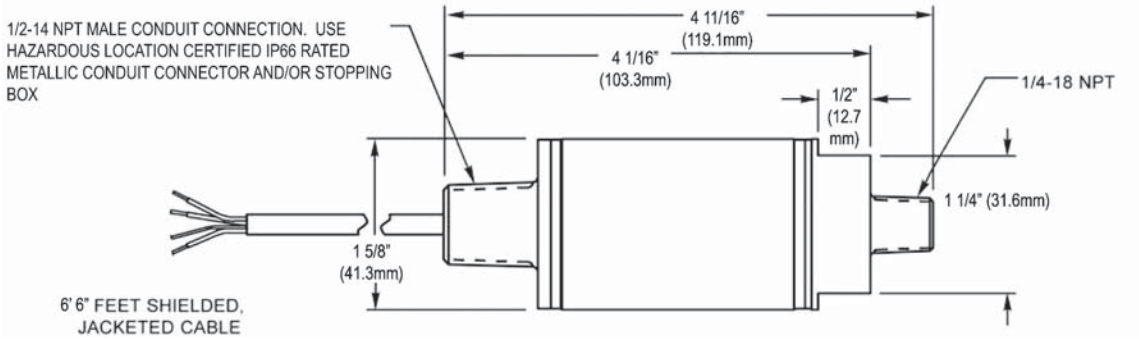

Wiring Diagram

Standard (Current)

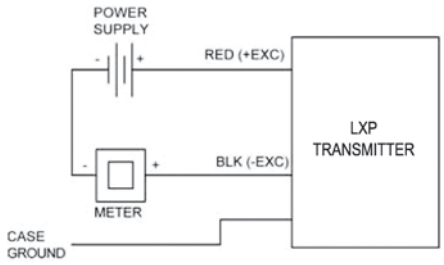

Optional (Voltage)

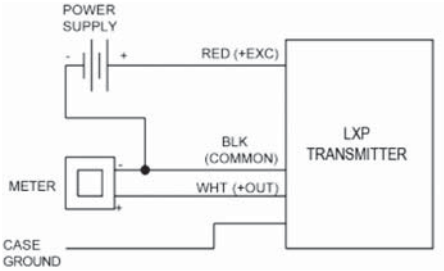

Cable Leads		
Cable Colours:	2-wire (current):	3-wire (voltage):
Red	+Excitation	+Excitation
White	-	+Output
Black	-Excitation	Common
Drain	Case Ground	Case Ground

Series Number (how to order)

L X P - ☐ - ☐☐ - ☐ - ☐ - ☐☐ - ☐☐ - ☐ - ☐ - ☐ - ☐☐☐☐

SERIES									
OUTPUT									
4...20 mA / 2-wire (standard)	S								
0.5...4.5 VDC / 3-wire	4								
1...6 VDC / 3-wire	5								
1...5 VDC / 3-wire	6								
0.5...5.5 VDC / 3-wire	7								
0.2...10 VDC / 3-wire	8								
1...11 VDC / 3-wire	9								
PRESSURE RANGE - PSI (BAR)									
30" Hg (-1/0)		V 1							
30" Hg/0/15 (-1/0/1)		V 2							
30" Hg/0/30 (-1/0/2)		V 3							
30" Hg/0/60 (-1/0/4)		V 4							
30" Hg/0/100 (-1/0/6)		V 5							
30" Hg/0/150 (-1/0/10)		V 6							
30" Hg/0/200 (-1/0/14)		V 7							
30" Hg/0/300 (-1/0/20)		V 8							
15		1 5							
30		3 0							
60		6 0							
100		1 H							
150		2 H							
200		3 H							
300		4 H							
500		5 H							
600		6 H							
1000		1 T							
1500		2 T							
2000		3 T							
3000		4 T							
4000		5 T							
5000		6 T							
6000		7 T							
7500		8 T							
10000		9 T							
Special Range		? ?							
PRESSURE									
Gauge (standard)			G						
Absolute (<300 PSI ONLY)			A						
ACCURACY									
0.25% (standard)				2					
ELECTRICAL CONNECTION									
6'6" (2m) Factory Sealed Cable Leads					T R				
Jacketed / Shielded Cable (standard)									
MECHANICAL CONNECTION									
1/4" NPT (standard)						N 4			
1/2" NPT						N 2			
G1/4"						G 4			
7/16-20 UNF-2B Female						U 1			
7/16-20 UNF-2B Male SAE						U 2			
SEAL									
Welded (standard)							W		
PRESSURE PORT									
17-4 PH								4	
DIAPHRAGM									
316 Stainless Steel									3
SPECIAL									
Standard									S
Calibrated in PSI									R 1
Calibrated in BAR									R 1 1
Additional Length of Leads (in Inches)									C ? ? ?
Larger Orifice (≥1500 PSI ONLY)									L

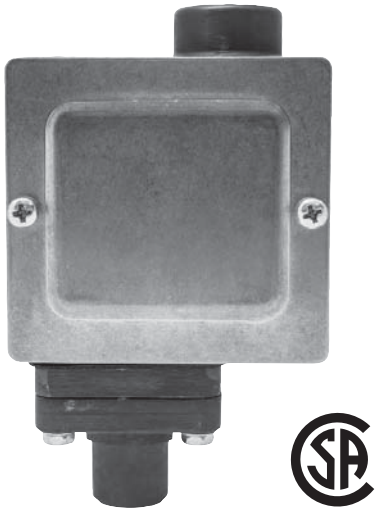

Description & Features:

- Piston-type pressure switch
- Vac to 500 psi pressure range
- SPDT switch
- Fixed or adjustable deadband
- Simple set point adjustment
- Anodized aluminum construction with Buna N wetted parts
- ±2% of the adjustable range accuracy
- NEMA 4, IP65 enclosure rating (NEMA 4X optional)
- CSA approved
- CRN registered
- 5 year warranty

Applications:

- Suitable for pump and compressor monitoring, HVAC systems and general industrial applications

Specifications	
Housing Material	Anodized aluminum
Accuracy	±2% of the adjustable range
Pressure Connection	1/4" NPTF
Electrical Connection	1/2" NPTF conduit connection with screw terminals
Wetted Parts	Aluminum and Buna N (PTFE O-ring or FKM diaphragm optional)
Set Point Adjustment	Self locking adjustment nut
Deadband	Fixed or adjustable
Contact Rating	10 amps @ 125/250 Vac 3 amps @ 480 Vac
No. of Contacts	1 x SPDT
Ambient/Process Temperature	-20°F to 165°F (-29°C to 74°C)
Enclosure Rating	NEMA 4, IP65 (NEMA 4X optional)
Approvals	CSA approved
Weight	1.5 lbs (680 grams)

Wiring Schematic

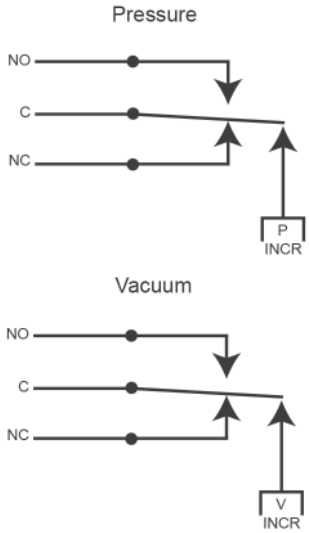

Order Codes

Adjustable Range psi (bar)		Approximate Deadband (Actuation value) psi (bar)	Proof Pressure psi (bar)	NEMA 4 Code	NEMA 4X Code
Min	Max				
0.5" Hg	30" Hg	0.3-2.5" Hg	30 (2)	2WPSH030VF	2WPSH030VFFX
0.5 (0.03)	15 (1)	0.1-1.2 (0.01-0.08)	1,000 (69)	2WPSH0015F	2WPSH0015FFX
3 (0.2)	90 (6)	0.5-8 (0.03-0.5)	1,000 (69)	2WPSH0090F	2WPSH0090FFX
10 (0.7)	250 (17)	1-20 (0.07-1.3)	1,000 (69)	2WPSH0250F	2WPSH0250FFX
25 (1.7)	500 (34)	4-28 (0.3-1.9)	1,000 (69)	2WPSH0500F	2WPSH0500FFX
1" Hg	30" Hg	Contact Winters for Values	30 (2)	2WPSH030VA	2WPSH030VAFX
1 (0.07)	15 (1)		1,000 (69)	2WPSH0015A	2WPSH0015AFX
6 (0.4)	90 (6)		1,000 (69)	2WPSH0090A	2WPSH0090AFX
15 (1)	250 (17)		1,000 (69)	2WPSH0250A	2WPSH0250AFX
35 (2.4)	500 (34)		1,000 (69)	2WPSH0500A	2WPSH0500AFX

2WPS General Purpose Pressure Switch

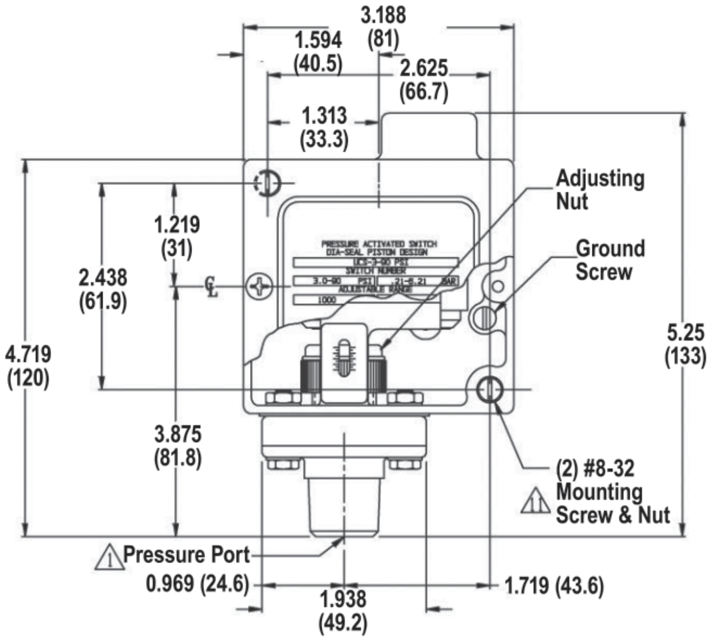

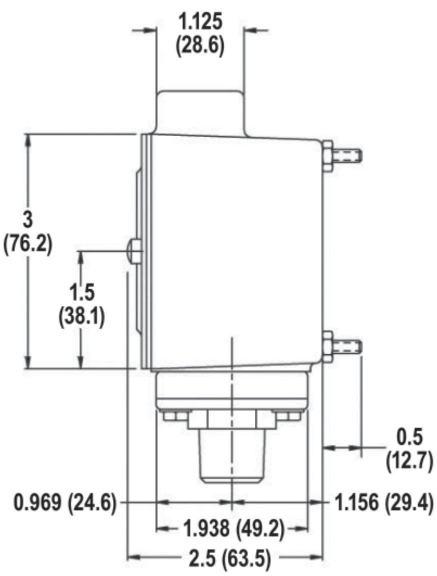

Series Number (how to order)

2WPS - ☐☐ - ☐☐☐☐ - ☐☐☐ - ☐ - ☐☐☐☐

	Adjustable Range psi (bar) Min	Adjustable Range psi (bar) Max	Deadband (*Actuation Value based on closed contact*)	Switch	Pressure Range	Pressure Connection	Wetted Parts	Options
SERIES								
SWITCH								
10 amps @ 125/250 VAC; 3 amps @ 480 VAC (standard)				H				
15 amps @ 125/250/480 VAC; 0.05 amps @ 125 VDC; 0.03 amps @ 250 VDC ADJUSTABLE DEADBAND				R				
10 amps @ 125/250/480 VAC; 2 amps @ 600 VAC; 0.4 amps @ 125 VDC; 0.2 amps @ 250 VDC MANUAL RESET				G				
1 amp @ 125 VAC; gold contact				GH				
PRESSURE RANGES PSI (BAR)								
Fixed Deadband	0.5" Hg	30" Hg	0.3-2.5" Hg		030V			
	0.5 (0.03)	15 (1)	0.1-1.2 (0.01-0.08)		0015			
	3 (0.2)	90 (6)	0.5-8 (0.03-0.5)		0090			
	10 (0.7)	250 (17)	1-20 (0.07-1.3)		0250			
	25 (1.7)	500 (34)	4-28 (0.3-1.9)		0500			
Adjustable Deadband	1" Hg	30" Hg	Contact Winters for Values		030V			
	1 (0.07)	15 (1)			0015			
	6 (0.4)	90 (6)			0090			
	15 (1)	250 (17)			0250			
	35 (2.4)	500 (34)			0500			
	Special Range				????			
PRESSURE CONNECTION								
1/4" NPT Female (standard)						N4		
1/8" int & 1/2" ext NPT						N2		
Nickel plated fitting						F2		
Brass fitting 1/8" int & 1/2" ext NPT						BR2		
Brass fitting 1/4" NPT						BR4		
WETTED PARTS								
Buna-N							B	
PTFE							T	
FKM diaphragm							V	
OPTIONS								
NEMA 4X enclosure								FX
Manual reset (must select class G limit switch)								RD
Factory preset (consult factory)								S???

Description & Features:

- Piston-type pressure switch
- 30 to 1,600 psi pressure range
- SPDT switch
- Simple set point adjustment, SPDT snap action
- Anodized aluminum construction with Buna-N wetted parts
- Hermetically sealed contacts available
- ±2% of the adjustable range accuracy
- NEMA 4, IP65 enclosure rating
- CSA approved
- CRN registered (up to 340 psi models)
- 5 year warranty

Applications:

- Suitable for pump and compressor monitoring, HVAC systems and general industrial applications

Specifications	
Housing Material	Anodized aluminum
Accuracy	±2% of the adjustable range
Pressure Connection	1/4" NPTF
Electrical Connection	1/2" NPTF conduit connection with screw terminals
Wetted Parts	Aluminum and Buna N (PTFE or FKM diaphragm optional)
Set Point Adjustment	Self locking adjustment nut
Deadband	Fixed
Contact Rating	10 amps @ 125/250/480 Vac 0.05 amps @ 125 Vdc 0.03 amps @ 250 Vdc (standard for 30, 85 and 340 ranges) 5 amps @ 125/250 Vac (hermetically sealed)
No. of Contacts	1 x SPDT (hermetically sealed option available)
Ambient Temperature	-20°F to 165°F (-29°C to 74°C)
Storage Temperature	-40°F to 200°F (-40°C to 93°C)
Enclosure Rating	NEMA 4, IP65
Approvals	CSA approved
Weight	3.75 lbs (1.7 kg)

Wiring Diagram

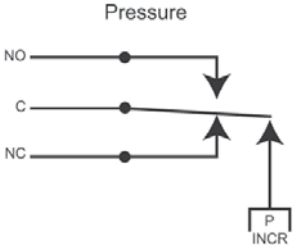

Order Codes

Adjustable Range psi (bar)		Approximate Deadband (Actuation value) psi (bar)	Proof Pressure psi (bar)	NEMA 4 Code
Min	Max			
0.5 (0.03)	30 (2)	0.4-2 (0.03-.13)	2,000 (133)	3WPSH030N4
3 (0.2)	85 (5.7)	0.8-7 (0.05-0.5)	2,000 (133)	3WPSH085N4
6 (0.4)	340 (23)	2-22 (0.13-1.5)	2,000 (133)	3WPSH340N4
25 (1.7)	600 (40)	2-17 (0.13-1.1)	2,000 (133)	3WPSH600N4
400 (27)	1,600 (107)	20-80 (1.3-5.3)	2,000 (133)	3WPSH1600N4

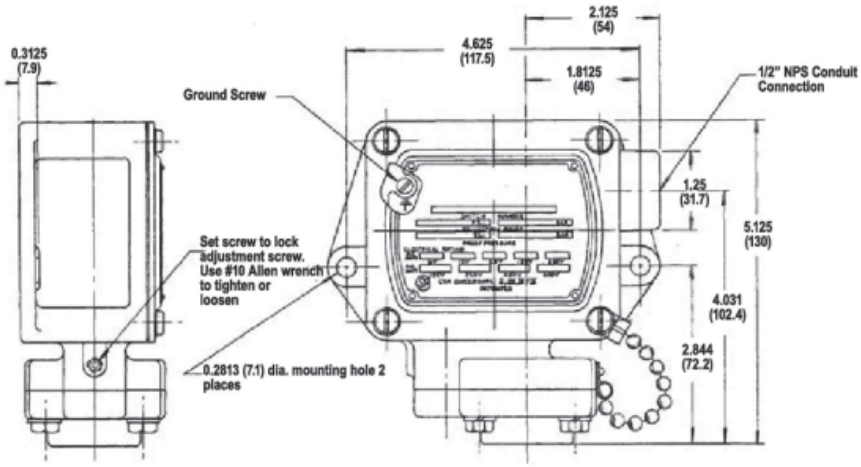

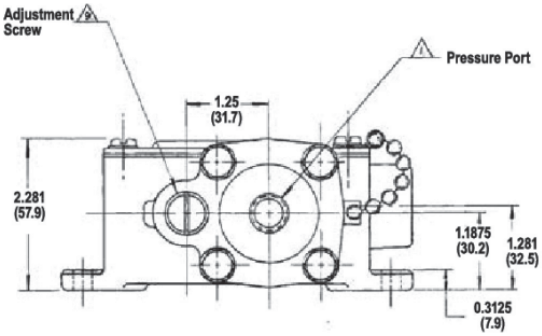

Series Number (how to order)

3	W	P	S	-			-					-			-		-				

SERIES

SWITCH

10 amps @ 125/250 VAC; 3 amps @ 480 VAC (standard for 600 range) — H

1 amp @ 125 VAC; gold contact, 1 amp @ 24 VDC — G H

5 amps @ 125/250 VAC (hermetically sealed) — H H

PRESSURE RANGES PSI (BAR)

Adjustable Range psi (bar)		Approximate Deadband (*Actuation Value based on closed contact*)	
Min	Max		
0.5 (0.03)	30 (2)	0.4-2 (0.03-0.13)	0 0 3 0
3 (0.2)	85 (5.7)	0.87-7 (0.05-0.5)	0 0 8 5
6 (0.4)	340 (23)	2-22 (0.13-1.5)	0 3 4 0
25 (1.7)	600 (40)	2-17 (0.13-1.1)	0 6 0 0
400 (27)	1,600 (107)	20-80 (1.3-5.3)	1 6 0 0

PRESSURE FITTING

Stainless steel, 1/4" NPT (standard) — S S

WETTED PARTS

Buna-N diaphragm (standard) — B

PTFE diaphragm — T

Viton diaphragm — V

OPTIONS

1/4" NPT (standard) — N 4

1/2" NPT pressure fitting (only available in stainless steel) — N 2

Factory preset (consult factory) — S ? ? ?

Switches

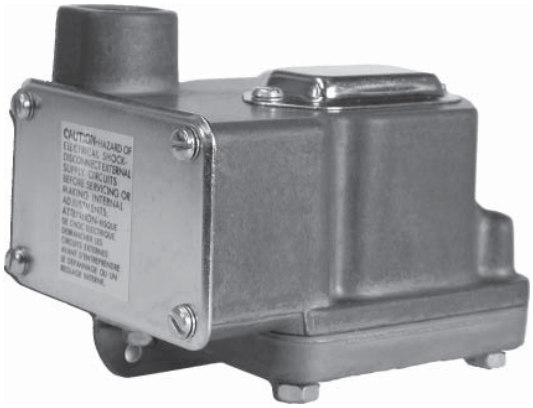

Description & Features:

- Single or dual set point
- “Hg to 150 psi pressure range
- Fixed deadband
- Simple set point adjustment
- Anodized aluminum housing with stainless steel diaphragm
- Hermetically sealed contacts available (excluding vacuum models)
- ±0.5% accuracy
- NEMA 4 enclosure rating (NEMA 4X optional)
- CRN registered
- 5 year warranty

Applications:

- Suitable for oil and gas, mining and general industrial applications

Specifications	
Housing Material	Anodized aluminum
Accuracy	±0.5% of the adjustable range
Pressure Connection	1/4” NPTF (1/2” NPTF optional)
Electrical Connection	Terminal block through 1/2” NPTF conduit connector
Wetted Parts	304 SS process connection and 17-7 PH SS diaphragm
Set Point Adjustment	Self locking adjustment screw
Deadband	Fixed
Contact Rating	10 amps @ 125/250 Vac
No. of Contacts	1 x SPDT (2 x SPDT optional)
Ambient Temperature	-65°F to 165°F (-54°C to 74°C)
Storage Temperature	-65°F to 200°F (-54°C to 93°C)
Enclosure Rating	NEMA 4 (NEMA 4X optional)
Approvals	UL approved, CRN registered
Weight	2.0 lbs (907 grams)

Note: Hermetically sealed option is only available for 1 x SPDT switches

Order Codes

Adjustable Range "Hg (mbar)		Approximate Deadband (Actuation value) "Hg (mbar)	Proof Pressure "Hg (mbar)	NEMA 4 Code	NEMA 4X Code
Min	Max				
0.06 (2)	6 (203)	0.14-0.28 (4.7-9.5)	20 (677)	4WPS103VN4	4WPS103VN4FX
0.8 (2.7)	30 (1,016)	0.4-0.8 (14-27)	30 (1,016)	4WPS118VN4	4WPS118VN4FX

Adjustable Range psi (bar)		Approximate Deadband (Actuation value) psi (bar)	Proof Pressure psi (bar)	NEMA 4 Code	NEMA 4X Code
Min	Max				
0.03 (0)	3 (0.2)	0.07-0.15 (0-0.01)	10 (0.7)	4WPS1003N4	4WPS1003N4FX
0.4 (0.03)	18 (1.2)	0.12-0.26 (0.01-0.02)	60 (4.1)	4WPS1018N4	4WPS1018N4FX
0.5 (0.03)	80 (5.5)	1.6-3.4 (0.1-0.2)	160 (10.9)	4WPS1080N4	4WPS1080N4FX
1.5 (0.1)	150 (10.3)	2.3-6 (0.2-0.4)	300 (20.4)	4WPS1150N4	4WPS1150N4FX

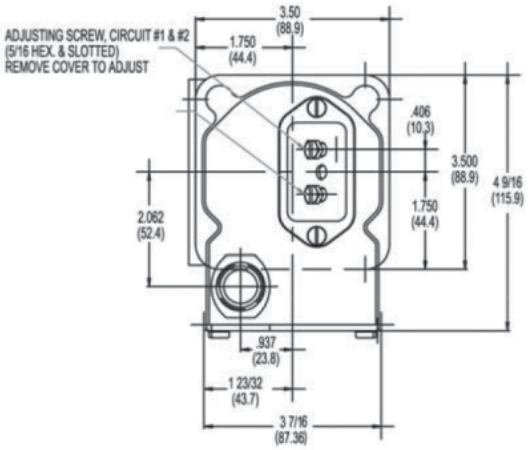

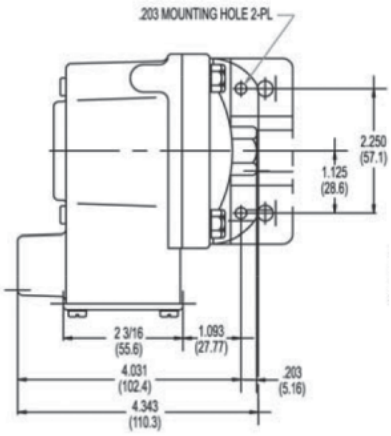

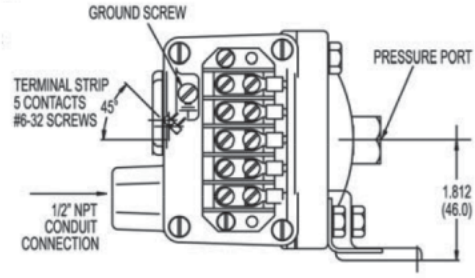

Wiring Code

Lead	Pressure		Vacuum	
	Circuit #1	Circuit #2	Circuit #1	Circuit #2
Normally Open	Red	Yellow	Blue	Orange
Common	Purple	Brown	Purple	Brown
Normally Closed	Blue	Orange	Red	Yellow

Wiring Diagram

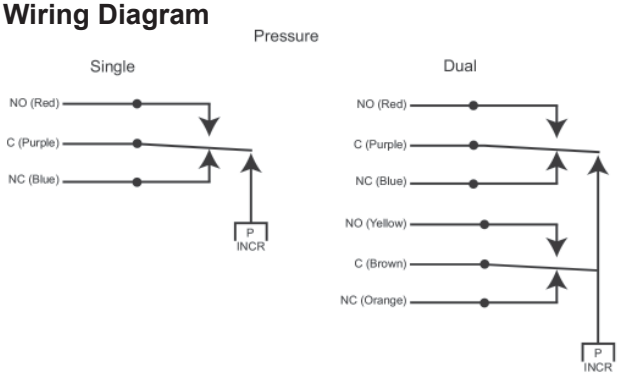

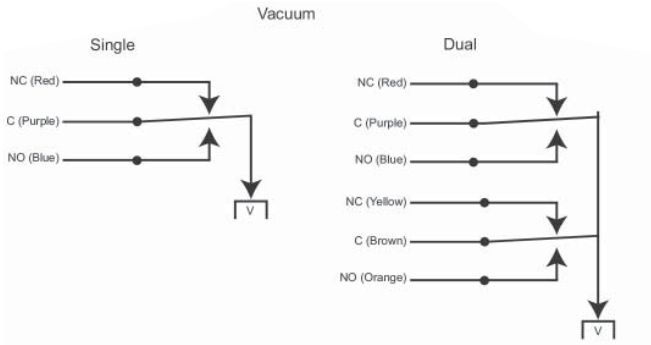

Series Number (how to order)

4	W	P	S		-			-				-			-				

SERIES

Single set point housed with terminal block	4	W	P	S	1
Dual set point housed with terminal block	4	W	P	S	2

SWITCH

10 amps @ 125/250 VAC, 0.5 amp @ 6-28 VDC	A	
1 amp @ 125 VAC, 1 amp @ 24 VDC with gold contacts	G	H
4 amps @ 125/250 VAC (hermetically sealed, not available on vacuum models)	A	A
10 amps @ 125/250 VAC (hermetically sealed, not available on vacuum models)	C	C
5 amps @ 125/250 VAC (hermetically sealed, not available on vacuum models)	H	H
1 amp @ 125 VAC with gold contacts (not -UL approved, hermetically sealed, not available on vacuum models)	G	G

PRESSURE RANGES "HG (MBAR)

Adjustable Range "HG (mbar)		Deadband (*Actuation Value based on closed contact*)			
Min	Max				
0.06 (2)	6 (203)	0.14-0.28 (4.7-9.5)	0	3	V
0.8 (27)	30 (1,016)	0.4-0.8 (14-27)	1	8	V

PRESSURE RANGES PSI (BAR)

Adjustable Range psi (bar)		Deadband (*Actuation Value based on closed contact*)			
Min	Max				
0.03 (0)	3 (0.2)	0.07-0.15 (0-0.01)	0	0	3
0.4 (0.03)	18 (1.2)	0.12-0.26 (0.01-0.02)	0	1	8
0.5 (0.03)	80 (5.5)	1.6-3.4 (0.1-0.2)	0	8	0
1.5 (0.1)	150 (10.3)	2.3-6 (0.2-0.4)	1	5	0

PRESSURE CONNECTION

1/4" NPT Female (standard)	N	4
1/2" NPT Female	N	2

OPTIONS

NEMA 4X	F	X		
Factory preset (consult factory)	S	?	?	?

Switches

5WPS Differential Pressure Switch

Description & Features:

- Bellows actuated “frictionless” switching mechanism
- 15 to 5,000 psi pressure range
- One or two SPDT switch
- Adjustable deadband available
- Cast aluminum construction with stainless steel wetted parts
- NEMA 4X, 12 & 13 enclosure rating
- UL recognized
- 5 year warranty

Applications:

- Pumping stations, remote locations, ideal for High-Low level control (requiring dual elements)

Specifications	
Housing Material	Cast aluminum
Sensitivity	±0.5% of range (for one SPDT switch)
Pressure Connection	1/4” NPTF
Electrical Connection	1/2” NPTF conduit connection
Wetted Parts	SS
Set Point Adjustment	Screw type, field adjustable
Deadband	Fixed (adjustable option available)
Contact Rating	15 amps @ 125/250/480 Vac
No. of Contacts	1 x SPDT (2 x SPDT optional)
Ambient Temperature	-40°F to 180°F (-40°C to 82°C)
Enclosure Rating	NEMA 4X, 12 & 13, hermetically sealed switch option available
Approvals	UL recognized (switch only)
Weight	Approx. 3 lbs (1.36 kg)

Order Codes

Range psi (bar)	Max. Deadband psi (bar)	Max. Working Pressure psi (bar)	NEMA 4X Code
0/15 (0/1)	0.7 (0.05)	300 (21)	5WPS0015AFX
0/30 (0/2)	0.7 (0.05)	300 (21)	5WPS0030AFX
0/60 (0/4)	0.8 (0.06)	300 (21)	5WPS0060AFX
0/100 (0/7)	1.0 (0.07)	300 (21)	5WPS0100AFX
0/150 (0/10)	4.0 (0.28)	1,500 (104)	5WPS0150AFX
0/200 (0/14)	4.0 (0.28)	1,500 (104)	5WPS0200AFX
0/300 (0/21)	4.0 (0.28)	1,500 (104)	5WPS0300AFX
0/600 (0/41)	5.0 (0.35)	1,500 (104)	5WPS0600AFX
0/1,000 (0/69)	12.0 (0.83)	3,000 (207)	5WPS1000AFX
0/2,000 (0/138)	15.0 (1.04)	3,000 (207)	5WPS2000AFX
0/3,000 (0/207)	37.0 (2.55)	7,000 (483)	5WPS3000AFX
0/5,000 (0/345)	45.0 (3.10)	7,000 (483)	5WPS5000AFX

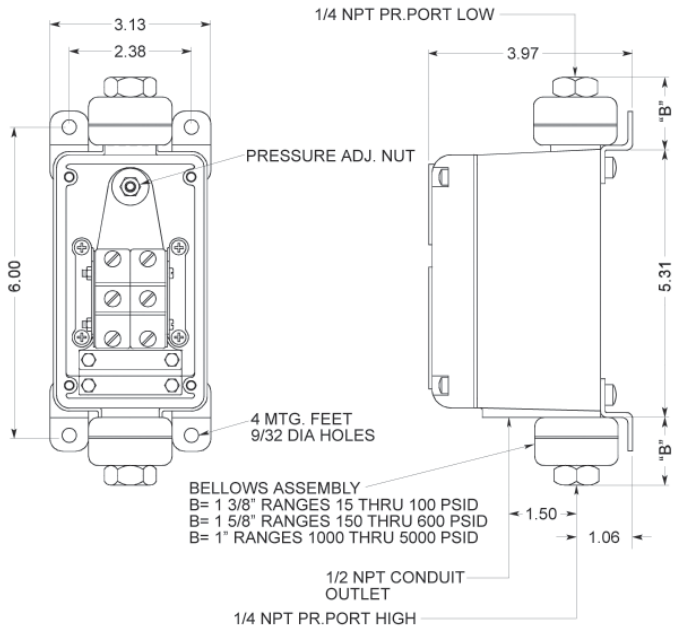

Wiring Diagram

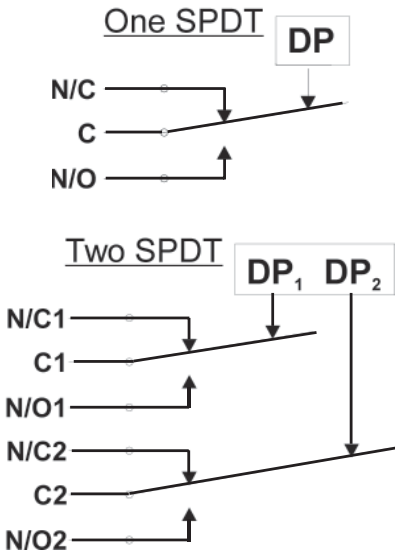

Series Number (how to order)

5 W P S - [ ] - [ ][ ] - [ ][ ] - [ ][ ] - [ ] - [ ][ ][ ][ ]

SERIES	
HOUSING	
Watertight NEMA 4X, 12 & 13	W
SWITCH	
One SPDT	1
Two tandem switches operate in parallel DPDT	1 1
Two SPDT independent adjustment	2
SENSING ELEMENT	
Bellows actuated differential pressure	B D
OPTIONS	
No options (blank)	
Adjustable deadband (adj. 10% - 50% of range)	A
External pressure adjustment	E
Two external pressure adjustment	E E
Manual reset, switch on increase pressure	R >
Manual reset, switch on decrease pressure	R <
CONTACT RAING	
Low deadband 15 amps @ 125/250/480 VAC	1
Standard deadband 15 amps @ 125/250/480 VAC, 0.5 amp @ 125 VDC	2
High DC rated (magnetic blowout) 10 amps @ 125 VDC, 3 amps @ 250 VDC	3
Hermetically sealed switch 1 amp @ 125 VAC, 25 amps res., 10 amps ind., 5 amp motor, 3 amp lamp @ 28 VDC	4
Gold contact 1 amp @ 125 VAC	6
PRESSURE RANGES PSI (BAR)	
0-15 PSI (0-1)	0 0 1 5
0-30 PSI (0-2)	0 0 3 0
0-60 PSI (0-4)	0 0 6 0
0-100 PSI (0-7)	0 1 0 0
0-150 PSI (0-10)	0 1 5 0
0-200 PSI (0-14)	0 2 0 0
0-300 PSI (0-21)	0 3 0 0
0-600 PSI (0-41)	0 6 0 0
0-1,000 PSI (0-69)	1 0 0 0
0-2,000 PSI (0-138)	2 0 0 0
0-3,000 PSI (0-207)	3 0 0 0
0-5,000 PSI (0-345)	5 0 0 0

9WPS Explosion Proof Compact Pressure Switch

C US

Description & Features:

- Vac to 10,000 psi pressure range
- Explosion proof SPDT or DPDT switch
- Stainless steel with FKM and PTFE wetted parts
- ANSI dual seal design
- Diaphragm seal/piston sensor
- Safe to adjust during operation
- Lockable setpoint wheel to avoid shifting during operation
- ±2% of full scale accuracy
- NEMA 4X, 7 & 9 enclosure rating
- CSA approved for hazardous locations
- Designed for sour gas applications requiring NACE standards MR0175-2009
- CRN registered (up to 3,000 psi models)
- 5 year warranty

Applications:

- Suitable for hazardous locations including safety panels and with pump and gas compressors, turbines and other oil & gas applications
- Appropriate for oil & gas, power plants, chemical facilities and water treatment
- Designed for hazardous locations where an explosion proof switch is required

Specifications	
Housing Material	316 SS
Port Material	316 SS
Accuracy	±2% of full scale
Pressure Connection	1/4” NPTF (1/2” NPTF optional)
Electrical Connection	1/2” NPTM, 18 AWG, 18” (457 mm) free leads
Wetted Parts	Vacuum and low pressure - seals: FKM diaphragm High pressure - piston: SS with PTFE backup ring and FKM o-ring
Set Point Adjustment	Internal adjustment wheel with built in locking set-screws (#6)[1]
Deadband	Fixed
Contact Rating	11 amps @ 125/250 Vac 5 amps @ 30 Vdc
No. of Contacts	1 x SPDT (2 x SPDT optional)
Vibration	10 g 10-500 Hz, MIL-STD-202F
Shock	50 g 11 ms, MIL-S-901C
EMI/RFI Protection	EN55011
Ambient Temperature	-40°F to 149°F (-40°C to 65°C)
Enclosure Rating	NEMA 4X, 7 & 9
Approvals	CSA approved (Canada and USA) for use in hazardous locations Class I, Div. 1, Groups B, C & D; Class II, Div. 1, Groups E, F & G CRN registered (up to 3,000 psi model) ANSI Dual Seal Compliant NACE MR0175-2009
Typical Life	2.5 million cycles
Weight	1.85 lbs (839 grams)

[1] Need to loosen set screw (#6) at all times when resetting adjustment.

Order Codes

Adjustable Range psi (bar)		Approximate Deadband (Actuation value) psi (bar)	Proof Pressure psi (bar)	SPDT 1/4" NPT	SPDT 1/2" NPT	DPDT 1/4" NPT	DPDT 1/2" NPT
Min	Max						
1" Hg	30" Hg	4-9" Hg	30" Hg	9WPSV01N4	9WPSV01N2	9WPSV012CCVN4S	9WPSV012CCVN2S
2 (0.1)	15 (1)	1-3 (.07-.2)	1,000 (69)	9WPSL02N4	9WPSL02N2	9WPSL022CCVN4S	9WPSL022CCVN2S
1 (0.07)	30 (2)	1-4 (.07-.27)	1,000 (69)	9WPSL06N4	9WPSL06N2	9WPSL062CCVN4S	9WPSL062CCVN2S
5 (0.3)	150 (10.3)	2-25 (0.1-1.7)	1,000 (69)	9WPSL03N4	9WPSL03N2	9WPSL032CCVN4S	9WPSL032CCVN2S
25 (1.7)	300 (20.6)	7-40 (0.5-2.8)	1,000 (69)	9WPSL04N4	9WPSL04N2	9WPSL042CCVN4S	9WPSL042CCVN2S
50 (3.4)	500 (34.5)	15-60 (1-4.1)	1,000 (69)	9WPSL05N4	9WPSL05N2	9WPSL052CCVN4S	9WPSL052CCVN2S
100 (6.9)	750 (51.7)	50-150 (3.4-10.3)	15,000 (1,034)	9WPSH06N4	9WPSH06N2	9WPSH062CCVN4S	9WPSH062CCVN2S
150 (10.3)	1,000 (69)	70-200 (4.7-13.8)	15,000 (1,034)	9WPSH07N4	9WPSH07N2	9WPSH072CCVN4S	9WPSH072CCVN2S
150 (10.3)	3,000 (207)	50-1,000 (3.4-68.9)	15,000 (1,034)	9WPSH11N4	9WPSH11N2	9WPSH112CCVN4S	9WPSH112CCVN2S
400 (27.6)	3,000 (207)	100-400 (6.9-27.6)	15,000 (1,034)	9WPSH08N4	9WPSH08N2	9WPSH082CCVN4S	9WPSH082CCVN2S
700 (48.2)	5,000 (345)	140-600 (9.6-41.4)	15,000 (1,034)	9WPSH09N4	9WPSH09N2	9WPSH092CCVN4S	9WPSH092CCVN2S
1,000 (69)	7,500 (517)	140-800 (9.6-55.2)	15,000 (1,034)	9WPSH10N4	9WPSH10N2	9WPSH102CCVN4S	9WPSH102CCVN2S
5,000 (344.8)	10,000 (689.7)	200-2,000 (13.8-137.9)	15,000 (1,034)	9WPSH12N4	9WPSH12N2	9WPSH122CCVN4S	9WPSH122CCVN2S

Vacuum

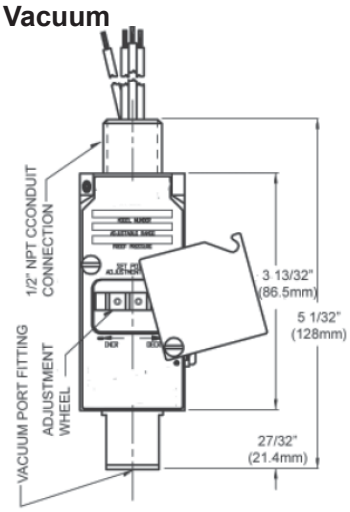

Low Pressure

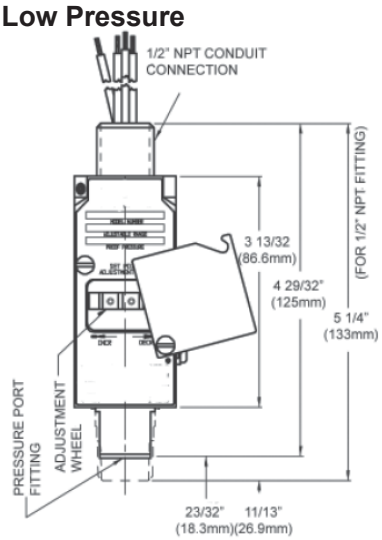

High Pressure

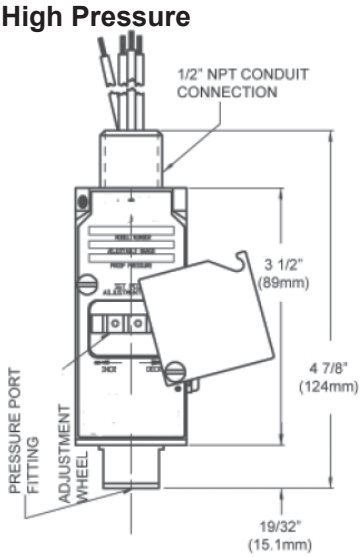

Top View

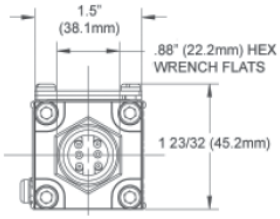

Bottom View

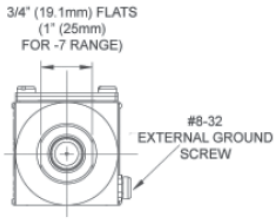

Wiring Code

Lead	Pressure		Vacuum	
	Circuit #1	Circuit #2	Circuit #1	Circuit #2
Normally Open	Red	Yellow	Red	Yellow
Common	Purple	Brown	Purple	Brown
Normally Closed	Blue	Orange	Blue	Orange
Ground	Green		Green	

Wiring Diagram

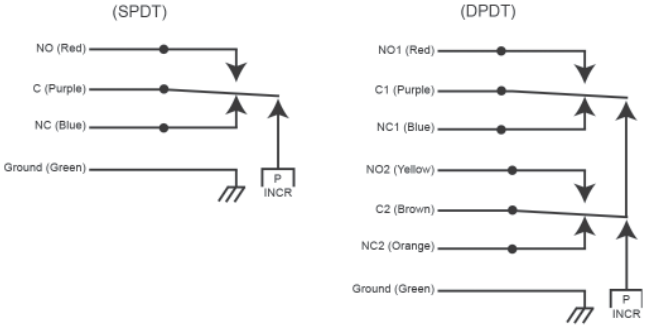

Series Number (how to order)

9 W P S - ___ - ___ - ___ - ___ - ___ - ___

SERIES

PRESSURE RANGES PSI (BAR)

	Adjustable Range psi (bar) Min	Adjustable Range psi (bar) Max	Deadband (*Actuation Value based on closed contact*)	
Vacuum Pressure Switch (*1"-30" Hg*)	1" Hg	30" Hg	4-9" Hg	V 0 1
Low Presssure Switch (*2-500 psi*)	2 (0.1)	15 (1)	1-3 (0.07-0.2)	L 0 2
	5 (0.3)	150 (10.3)	2-25 (0.1-1.7)	L 0 3
	25 (1.7)	300 (20.6)	7-40 (0.5-2.8)	L 0 4
	50 (3.4)	500 (34.5)	15-60 (1-4.1)	L 0 5
High Pressure Switch (*100-10,000 psi*)	100 (6.9)	750 (51.7)	50-150 (3.4-10.3)	H 0 6
	150 (10.3)	1,000 (69)	70-200 (4.7-13.8)	H 0 7
	400 (27.6)	3,000 (207)	100-400 (6.7-27.6)	H 0 8
	700 (48.2)	5,000 (345)	140-600 (9.6-41.4)	H 0 9
	1,000 (69)	7,500 (517)	140-800 (9.6-55.2)	H 1 0
	150 (10.3)	3,000 (207)	50-1,000 (3.4-68.9)	H 1 1
	5,000 (344.8)	10,000 (689.7)	200-2,000 (13.8-137.9)	H 1 2
	Special Range			? ? ?

SWITCH

SPDT Switch, 11 amps @ 125 / 250 VAC; 5 amps @ 30 VDC (standard)	1 C C
DPDT Switch, 11 amps @ 125 / 250 VAC; 5 amps @ 30 VDC	2 C C
SPDT gold contact switch, 1 amp @ 125 VAC	1 G H
DPDT gold contact switch, 1 amp @ 125 VAC	2 G H

WETTED PARTS

Viton Diaphragm & O-Rings (standard)	V
Buna-N Diaphragm & O-Rings	B
EPR Diaphragm & O-Rings (no UL or CSA)	E

MECHANICAL CONNECTION

1/4" NPT Female (standard)	N 4
1/2" NPT Female	N 2
7/16-20 SAE Female	U 1

HOUSING

316 Stainless Steel (standard)	S

OPTIONS

Extra Wire Length (*in Inches*)	C ? ? ?
Special	S ? ? ?

Switches

Process Media and Material Compatibility: Since the wetted parts of the diaphragm seal assembly, which consist of the lower housing and diaphragm element itself, as well as any gaskets, will come in contact with the process, it is imperative to ensure the proper material is selected. The material selected must be compatible with all the various chemicals the seal may come in contact with while in service.

Temperature (Process & Ambient): Each diaphragm seal assembly is filled with an amount of fill fluid at ambient temperature. The increase of process or media temperature can cause the fill fluid to expand, creating a larger volume and pressure build up in the assembly.

Pressure Instrument: The diaphragm seal chosen must have the ability to provide enough volumetric displacement to drive the instrument through it's full range. A rule of thumb is as follows: The lower the pressure, the more displacement is needed. The larger the gauge, the more displacement is needed. The smaller the diaphragm, the less displacement it can provide.

Process Connection and Orientation: The most common connections for diaphragm seals are threaded from 1/4" to 1" NPT and flanged. Be sure to specify both the flange size and rating when selecting a flanged seal.

Pressure Range: As stated above the diaphragm selected must be able to handle the pressure range to be sensed. The lower the pressure, the larger the diaphragm element must be to ensure sensitivity and proper displacement.

Response Time: Response time to sudden changes in process pressure can be effected by many things, such as size of the diaphragm, viscosity of the fill fluid, ambient and process temperatures and the use of capillary for remote mounted gauges.

Fill Fluid: Fill fluid selection is critical to the performance of the diaphragm seal assembly. Process and ambient temperatures, pressure and compatibility with the process media must be considered. Inert fills such as Halocarbon®, Fluorolube® and Krytox® must be specified when oxidizers are present.

	Series	Instrument Connection			Process Connection							Wetted Parts Material									Pressure Range								
Catalogue Page		1/4" NPT	1/2" NPT	1/2" NPT Male	1/4" NPT	1/2" NPT	3/4" NPT	≥1" NPT	Tri-Clamp®	RF Flange	Wafer Flange	Buna	Hastelloy® C	Monel®	PVC	Stainless Steel	Tantalum	PTFE	FKM	Other	Vac - 200 psi	30-600 psi	Vac - 1,000 psi	30-1,000 psi	30-1,300 psi	30-2,500 psi	50-5,800 psi	1,000-6,000 psi	RoHS compliant
160	D10 PVC 2-Piece Seal	X			X	X									X			X			X								
161	D15 Threaded Flush Mount Seal	X					X									X											X	X	X
162	D20 Sanitary Seal	X							X							X						X							X
163	D30 High Pressure Seal	X			X											X												X	X
164	D40 Medium Duty Seal	X	X		X	X										X								X					X
165	D44 Flanged Seal (PTFE)	X	X							X								X					X						
167	D44 Flanged Seal All Welded	X	X							X			X	X	X	X	X	X	X	X						X			
169	D46 Flanged Flush Mount Seal	X	X							X						X									X				
170	D70 Heavy Duty 2-Piece Industrial Seal	X	X		X	X	X	X				X	X	X		X		X	X							X			X
172	D71 NACE 2-Piece Seals	X	X		X	X		X				X	X					X	X							X			
174	D81 Isolation Ring	X	X	X				X			X	X	X		X	X		X	X	X			X						
176	D85 In Line Flow Thru Seal	X	X		X	X	X	X								X						X							
177	D90 Saddle Weld Seal	X	X					X					X	X		X	X	X	X	X		X							

Hastelloy® is a registered trademark of Haynes International, Inc.
Fluorolube® is a registered trademark of Gabriel Performance Products, LLC.
Halocarbon® is a registered trademark of Halocarbon Products Corporation
Krytox® is a registered trademark of DuPont Corporation
Monel® is a registered trademark of Inco Alloys International
Tri-Clamp® is a registered trademark of Tri-Clover

Note: When selecting a diaphragm seal, always refer to ASME B40.100 (2013)

D10 PVC 2-Piece Seal

Vacuum to 200 psi (-100 to 1,380 kPa)

Description & Features:

- Features a durable and flexible PTFE diaphragm seal, which serves as a protective barrier between the process fluid and instrument
- High accuracy and dependability
- ASME B40.100 compliant
- 5 year warranty

Applications:

- Provides an economical solution to protect instruments from corrosion and clogging
- Used to isolate and protect a pressure instrument on ultra-pure or highly corrosive fluid lines
- Can be used with liquids such as demineralized water, sulphuric acid, hydrochloric acid and caustic gases (such as corrosive air and ammonia), where such fluids will corrode metal instruments
- Review of chemical compatibility is available upon request

Specifications	
Housing	PVC (Polyvinyl Chloride, Type 1, Grade 1)
Diaphragm	PTFE
Minimum Operating Pressure	Vacuum
Maximum Operating Pressure	200 psi (1,380 kPa)
Gauge Connection	1/4” NPTF
Process Connection	1/4”, 1/2” NPTF
Process Temperature	77°F to 104°F (25°C to 40°C)

Order Codes (products in bold are normally stock in North America)

1/4” NPTF x 1/4” NPTF	1/4” NPTF x 1/2” NPTF
D10985	D10986

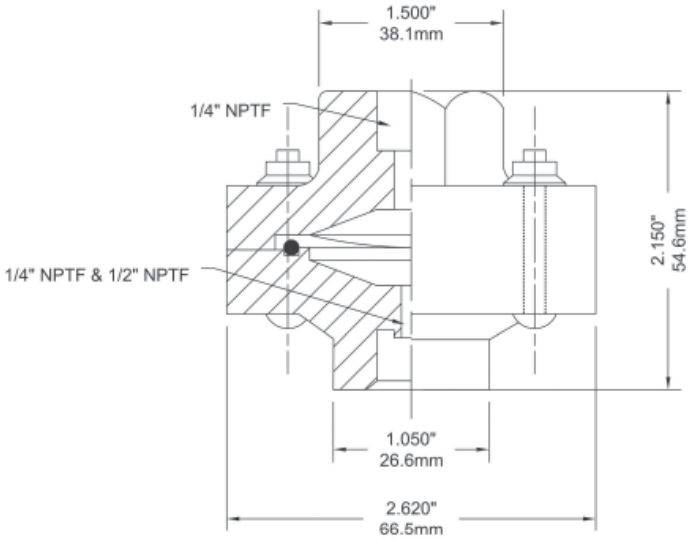

50 to 5,800 psi (345 to 40,000 kPa)

Description & Features:

- Constructed with a welded diaphragm placed at the end of the male NPT connection, eliminating the normal diaphragm chamber where solidification of the process media may render the seal inoperable
- Rugged and suitable for the most severe process applications
- ASME B40.100 compliant
- CRN registered
- 5 year warranty

Applications:

- Suitable for any process where freezing or solidification of the pressure media is a concern

Specifications	
Housing	AISI 316 SS
Diaphragm	AISI 316L SS, welded
Minimum Operating Pressure	50 psi (345 kPa)
Maximum Operating Pressure	5,800 psi (40,000 kPa)
Gauge Connection	1/4” NPTF
Process Connection	3/4” NPTM
Process Temperature	-20°F to 360°F (-29°C to 182°C)

Order Codes

1/4” NPTF x 3/4” NPTM
D15992

Option suffix for above order code only:
SF-D = Silicone fill (seal only)

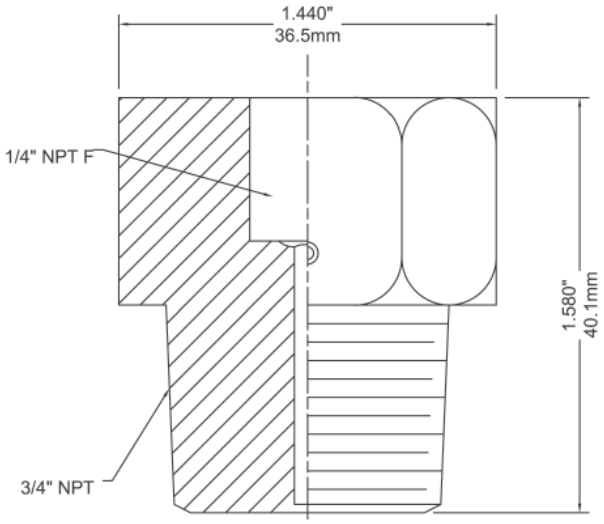

D20 Sanitary Seal

30 to 600 psi (200 to 4,140 kPa)

Description & Features:

- Meets the requirements of dairy, food, beverage, chemical and pharmaceutical industries
- 3A approved
- ASME B40.100 compliant
- CRN registered
- 5 year warranty

Applications:

- D20 may be attached to any Winters all SS gauge for sanitary installations.

Specifications	
Housing	AISI 316 SS
Diaphragm	AISI 316L SS, welded
Minimum Operating Pressure	30 psi (200 kPa)
Maximum Operating Pressure	600 psi (4,140 kPa)
Gauge Connection	1/4" NPTF
Process Connection	1.5" (40mm) and 2" (50mm) Tri-Clamp® fitting standard
Process Temperature	-4°F to 248°F (-20°C to 120°C)
Surface Finish	8 Ra

Order Codes

1.5" (40mm)	2" (50mm)
D20980	D20976

Option suffix for above order codes only:
SF-D = Silicone fill (seal only)

1.5" Tri-Clamp®

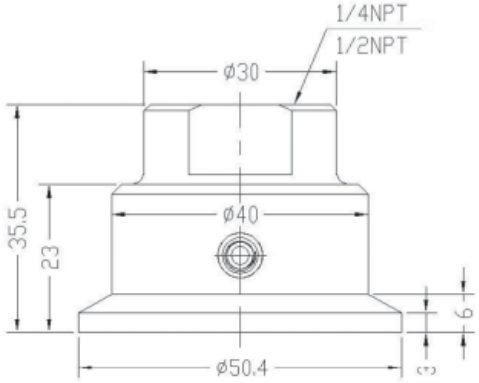

2" Tri-Clamp®

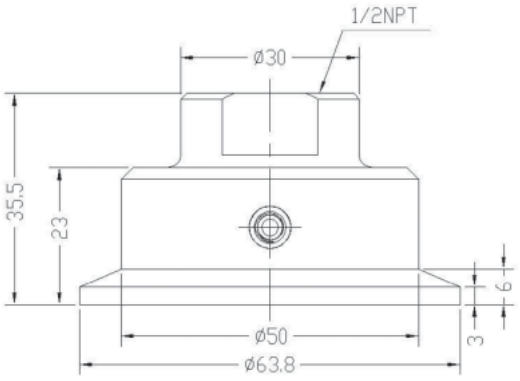

Tri-Clamp® is a registered trademark of Tri-Clover

1,000 to 6,000 psi (6,900 to 41,300 kPa)

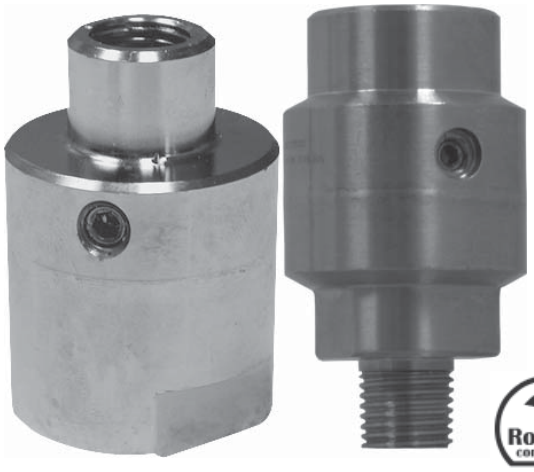

Description & Features:

- Compact, lightweight and economical
- Constructed of AISI 316 stainless steel and is welded together into a one piece unit
- ASME B40.100 compliant
- CRN registered
- 5 year warranty

Applications:

- Offers protection for pressure instruments (gauges and transmitters) from corrosive, contaminated or viscous media
- Ideally suited for applications where space limitations exist

Specifications	
Housing	AISI 316 SS
Diaphragm	AISI 316L SS, welded
Minimum Operating Pressure	1,000 psi (6,900 kPa)
Maximum Operating Pressure	6,000 psi (41,300 kPa)
Gauge Connection	1/4" NPTF
Process Connection	1/4" NPTF or NPTM
Process Temperature	-49°F to 302°F (-45°C to 150°C)

Order Codes

1/4" NPTF x 1/4" NPTF	1/4" NPTF x 1/4" NPTM
D30975	D30976

Option suffix for above order codes only:
SF-D = Silicone fill (seal only)

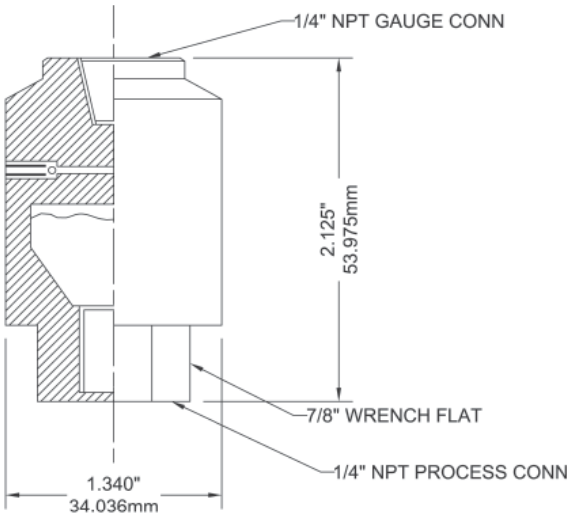

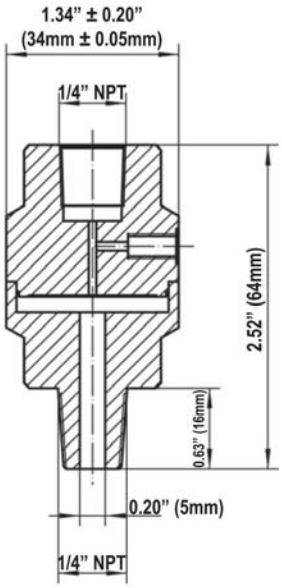

D40 Medium Duty Seal

30 to 1,000 psi (200 to 6,900 kPa)

Description & Features:

- Compact (one piece), lightweight and economical
- ASME B40.100 compliant
- CRN registered
- 5 year warranty

Applications:

- Ideally suited for applications where space limitations exist
- Primarily utilized to protect gauges and transmitters from corrosive media
- Utilized in many OEM applications

Specifications	
Housing	AISI 316 SS
Diaphragm	AISI 316L SS, welded
Minimum Operating Pressure	30 psi (200 kPa)
Maximum Operating Pressure	1,000 psi (6,900 kPa)
Gauge Connection	1/4", 1/2" NPTF
Process Connection	1/4", 1/2" NPTF or NPTM
Process Temperature	-49°F to 302°F (-45°C to 150°C)

Order Codes (products in bold are normally stock in North America)

Connection	1/4" x 1/4" NPT	1/4" x 1/2" NPT	1/2" x 1/2" NPT
F x F	D40973	D40972	D40974
F x M	D40975	D40976	D40977

Option suffix for above order codes only:
SF-D = Silicone fill (seal only)

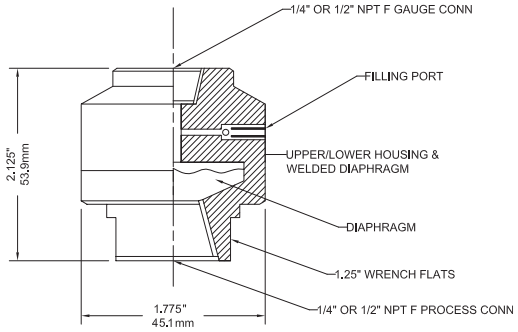

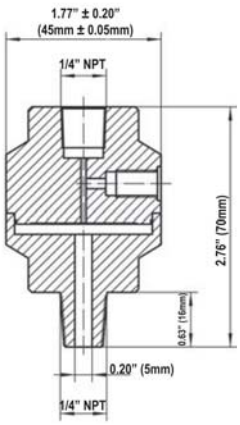

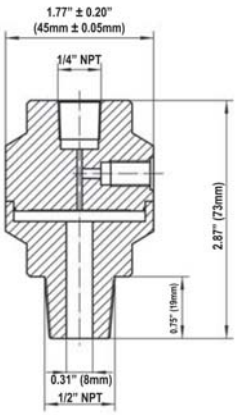

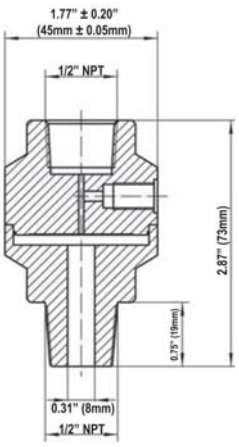

Vac to 1,000 psi (0 to 6.900 kPa)

Description & Features:

- "Continuous use" seals - backing plate will prevent diaphragm from rupturing if pressure sensing instrument fails. Pressure will be held until instrument is replaced
- Various sizes and housing materials available
- ASME B40.100 compliant
- 5 year warranty

Applications:

- Used in industrial applications such as oil refineries, pulp and paper mills and chemical plants

Specifications	
Housing	316 SS, Monel®, Hastelloy® B & C, titanium, tantalum, PVC, carbon steel, PTFE, acetal, other (nickel plated carbon steel or SS upper housing standard)
Diaphragm	PTFE for increased compatibility, sensitivity and versatility
Construction	Two piece construction
Connection	1/4", 1/2" NPTF gauge connections standard (other NPTF gauge connections available) 1" (25mm), 1.5" (40mm) and 2" (50mm) pipe size and #150 and #300 pressure rating standard (other configurations available)
Maximum Temperature Limit	400°F (204°C)

Order Codes

Type*	Instrument Connection	Diaphragm Material	Lower Housing Wetted Parts	Upper Housing Non-Wetted Parts	
				Carbon Steel	Stainless Steel
1" - 150#RF				Code	
PTFE Diaphragm	1/4" NPTF	PTFE	316 SS - PTFE lined	D44003	D44004
	1/2" NPTF			D44001	D44002
1" - 300#RF					
PTFE Diaphragm	1/4" NPTF	PTFE	316 SS - PTFE lined	D44007	D44008
	1/2" NPTF			D44005	D44006
1.5" - 150#RF					
PTFE Diaphragm	1/4" NPTF	PTFE	316 SS - PTFE lined	D44011	D44012
	1/2" NPTF			D44009	D44010
1.5" - 300#RF					
PTFE Diaphragm	1/4" NPTF	PTFE	316 SS - PTFE lined	D44015	D44016
	1/2" NPTF			D44013	D44014
2" - 150#RF					
PTFE Diaphragm	1/4" NPTF	PTFE	316 SS - PTFE lined	D44019	D44020
	1/2" NPTF			D44017	D44018
2" - 300#RF					
PTFE Diaphragm	1/4" NPTF	PTFE	316 SS - PTFE lined	D44023	D44024
	1/2" NPTF			D44021	D44022

*Replaceable diaphragms available

Hastelloy® is a registered trademark of Haynes International, Inc.
Monel® is a registered trademark of Inco Alloys International

150# RF C/W OPTIONAL FLUSHING PORT

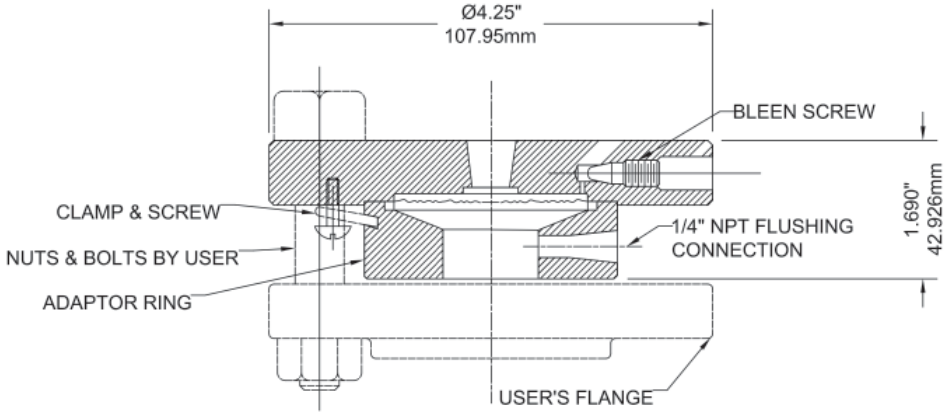

300# RF C/W OPTIONAL FLUSHING PORT

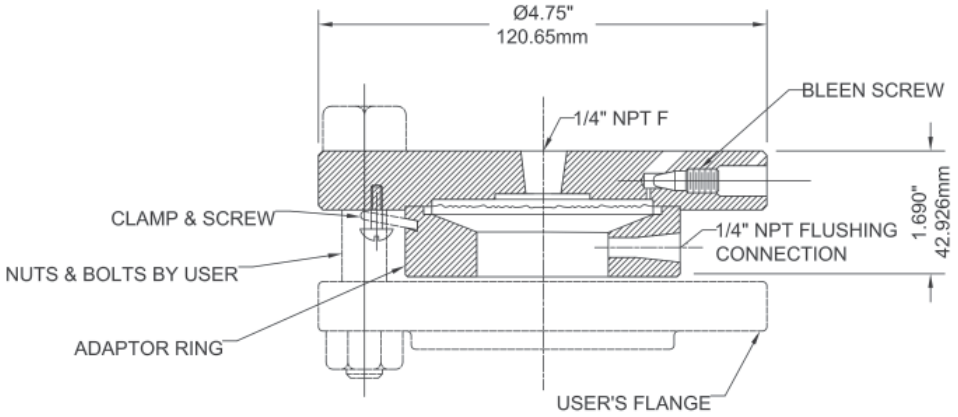

30 to 2,500 psi (200 to 17,250 kPa)

Description & Features:

- "Continuous use" seals - backing plate will prevent diaphragm from rupturing if pressure sensing instrument fails. Pressure will be held until instrument is replaced
- Various sizes and housing materials available
- ASME B40.100 compliant
- 5 year warranty

Applications:

- Used in industrial applications such as oil refineries, pulp and paper mills and chemical plants

Specifications	
Housing	316 SS, Monel®, Hastelloy® B & C, titanium, tantalum, PVC, carbon steel, PTFE, acetal, other (nickel plated carbon steel or SS upper housing standard)
Construction	Two piece construction
Connection	1/4", 1/2" NPTF gauge connections standard (other NPTF gauge connections available) 1" (25mm), 1.5" (40mm) and 2" (50mm) pipe size and #150 and #300 pressure rating standard (other configurations available)
Maximum Temperature Limit	450°F (232°C) PTFE lined: 400°F (204°C) (higher temperature limits available)
Other	Cleanout type for easy cleaning and calibrating. Saddle diaphragm seals available upon request. Flushing connections available

Order Codes

Type*	Instrument Connection	Diaphragm Material	Lower Housing Wetted Parts	Upper Housing Non-Wetted Parts	
				Carbon Steel	Stainless Steel
1" - 150#RF				**Code**	
Welded Diaphragm	1/4" NPTF	316 SS	316 SS	D441150SS25CS	D441150SS25SS
		Tantalum	316 SS - PTFE lined	D441150UL25CS	D441150UL25SS
		Hastelloy® C	Monel®	D441150HM25CS	D441150HM25SS
		Hastelloy® C	Hastelloy® C	D441150HH25CS	D441150HH25SS
	1/2" NPTF	316 SS	316 SS	D441150SS5CS	D441150SS5SS
		Tantalum	316 SS - PTFE lined	D441150UL5CS	D441150UL5SS
		Hastelloy® C	Monel®	D441150HM5CS	D441150HM5SS
		Hastelloy® C	Hastelloy® C	D441150HH5CS	D441150HH5SS
1" - 300#RF				**Code**	
Welded Diaphragm	1/4" NPTF	316 SS	316 SS	D441300SS25CS	D441300SS25SS
		Tantalum	316 SS - PTFE lined	D441300UL25CS	D441300UL25SS
		Hastelloy® C	Monel®	D441300HM25CS	D441300HM25SS
		Hastelloy® C	Hastelloy® C	D441300HH25CS	D441300HH25SS
	1/2" NPTF	316 SS	316 SS	D441300SS5CS	D441300SS5SS
		Tantalum	316 SS - PTFE lined	D441300UL5CS	D441300UL5SS
		Hastelloy® C	Monel®	D441300HM5CS	D441300HM5SS
		Hastelloy® C	Hastelloy® C	D441300HH5CS	D441300HH5SS

*Replaceable and PTFE diaphragms available
Other materials, pipe size and pressure ratings available upon request

Hastelloy® is a registered trademark of Haynes International, Inc.
Monel® is a registered trademark of Inco Alloys International

Order Codes

Type*	Instrument Connection	Diaphragm Material	Lower Housing Wetted Parts	Upper Housing Non-Wetted Parts	
				Carbon Steel	Stainless Steel
1.5" - 150#RF				**Code**	
Welded Diaphragm	1/4" NPTF	316 SS	316 SS	D4415150SS25CS	D4415150SS25SS
		Tantalum	316 SS - PTFE lined	D4415150UL25CS	D4415150UL25SS
		Hastelloy® C	Monel®	D4415150HM25CS	D4415150HM25SS
		Hastelloy® C	Hastelloy® C	D4415150HH25CS	D4415150HH25SS
	1/2" NPTF	316 SS	316 SS	D4415150SS5CS	D4415150SS5SS
		Tantalum	316 SS - PTFE lined	D4415150UL5CS	D4415150UL5SS
		Hastelloy® C	Monel®	D4415150HM5CS	D4415150HM5SS
		Hastelloy® C	Hastelloy® C	D4415150HH5CS	D4415150HH5SS
1.5" - 300#RF				**Code**	
Welded Diaphragm	1/4" NPTF	316 SS	316 SS	D4415300SS25CS	D4415300SS25SS
		Tantalum	316 SS - PTFE lined	D4415300UL25CS	D4415300UL25SS
		Hastelloy® C	Monel®	D4415300HM25CS	D4415300HM25SS
		Hastelloy® C	Hastelloy® C	D4415300HH25CS	D4415300HH25SS
	1/2" NPTF	316 SS	316 SS	D4415300SS5CS	D4415300SS5SS
		Tantalum	316 SS - PTFE lined	D4415300UL5CS	D4415300UL5SS
		Hastelloy® C	Monel®	D4415300HM5CS	D4415300HM5SS
		Hastelloy® C	Hastelloy® C	D4415300HH5CS	D4415300HH5SS
2" - 150#RF				**Code**	
Welded Diaphragm	1/4" NPTF	316 SS	316 SS	D442150SS25CS	D442150SS25SS
		Tantalum	316 SS - PTFE lined	D442150UL25CS	D442150UL25SS
		Hastelloy® C	Monel®	D442150HM25CS	D442150HM25SS
		Hastelloy® C	Hastelloy® C	D442150HH25CS	D442150HH25SS
	1/2" NPTF	316 SS	316 SS	D442150SS5CS	D442150SS5SS
		Tantalum	316 SS - PTFE lined	D442150UL5CS	D442150UL5SS
		Hastelloy® C	Monel®	D442150HM5CS	D442150HM5SS
		Hastelloy® C	Hastelloy® C	D442150HH5CS	D442150HH5SS
2" - 300#RF				**Code**	
Welded Diaphragm	1/4" NPTF	316 SS	316 SS	D442300SS25CS	D442300SS25SS
		Tantalum	316 SS - PTFE lined	D442300UL25CS	D442300UL25SS
		Hastelloy® C	Monel®	D442300HM25CS	D442300HM25SS
		Hastelloy® C	Hastelloy® C	D442300HH25CS	D442300HH25SS
	1/2" NPTF	316 SS	316 SS	D442300SS5CS	D442300SS5SS
		Tantalum	316 SS - PTFE lined	D442300UL5CS	D442300UL5SS
		Hastelloy® C	Monel®	D442300HM5CS	D442300HM5SS
		Hastelloy® C	Hastelloy® C	D442300HH5CS	D442300HH5SS

*Replaceable and PTFE diaphragms available
Other fill fluids (seal only), materials, pipe size and pressure ratings available upon request.
For technical drawings, refer to D44 PTFE.

Hastelloy® is a registered trademark of Haynes International, Inc.
Monel® is a registered trademark of Inco Alloys International

30 to 1,300 psi (207 to 8,970 kPa)

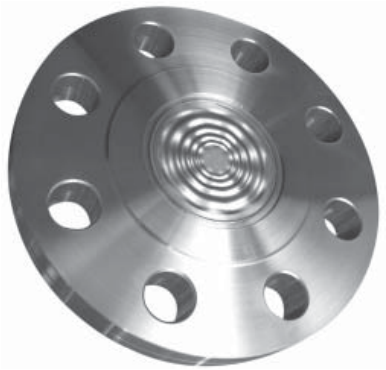

Description & Features:

- One-piece design - no internal gaskets or o-rings
- Diaphragm is flush to the gasket sealing surface so no internal cavities for media buildup
- Various sizes available
- ASME B40.100 compliant
- 5 year warranty

Applications:

- Oil refineries, pulp and paper mills, chemical plants
- Where media buildup is a concern

Specifications	
Housing	316 SS
Diaphragm	316L SS bonded to housing
Construction	One piece construction
Connection	1/4", 1/2" NPTF gauge connections standard 1.5" (40mm), 2" (50mm) and 3" (75mm) pipe size
Maximum Temperature Limit	450°F (232°C)

Order Codes

Type	Instrument Connection	Code
2" - 150#RF	1/4" NPTF	D462548
	1/2" NPTF	D462549
2" - 300#RF	1/4" NPTF	D462550
	1/2" NPTF	D462551
2" - 600#RF	1/4" NPTF	D462552
	1/2" NPTF	D462553
3" - 150#RF	1/4" NPTF	D462554
	1/2" NPTF	D462555
3" - 300#RF	1/4" NPTF	D462556
	1/2" NPTF	D462557
3" - 600#RF	1/4" NPTF	D462558
	1/2" NPTF	D462559

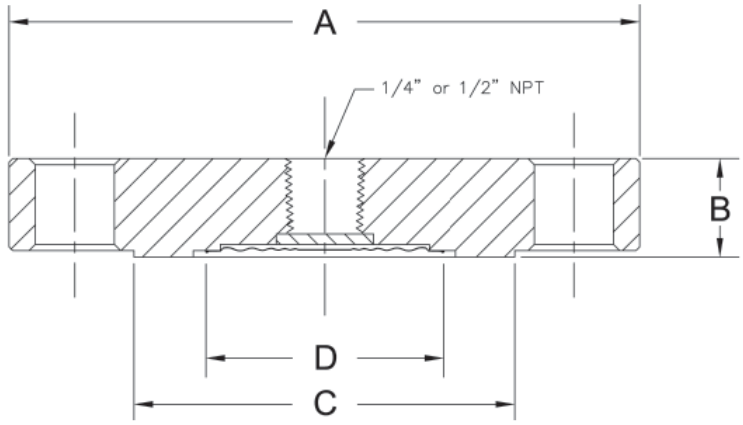

Pipe Size	Rating	A	B	C	D
2"	150#	6"	0.88"	3.6"	2.2"
	300#	6.5"	0.88"		
	600#		1.25"		
3"	150#	7.5"	0.94"	5"	2.2" or 3"
	300#	8.2"	1.12"		
	600#		1.5"		

Other sizes available upon request

D70 Heavy Duty 2-Piece Industrial Seal

30 to 2,500 psi (207 to 17,250 kPa)

Description & Features:

- Two piece construction and designed to withstand even the most severe process applications
- "Continuous use" seals - backing plate will prevent diaphragm from rupturing if pressure sensing instrument fails. Pressure will be held until instrument is replaced
- Diaphragm is separable for servicing and is available with a 1/8" NPT or 1/4" NPT flushing connection for removing any material which may clog the process connection
- Standard diaphragm is constructed of AISI 316L stainless steel and welded to the upper chamber of the seal for pressures 30 psi (200 kPa) and above; optional FKM diaphragm available for ranges from 30" Hg Vacuum (-100 kPa) up to 100 psi (690 kPa). Other diaphragms available
- FKM diaphragm is highly recommended for applications less than 10 psi
- ASME B40.100 compliant
- CRN registered (all 316 SS only)
- 5 year warranty

Applications:

- Where the process fluid is corrosive or viscous and would clog instrument internals/solidify within the pressure gauge, switch or transmitter

Specifications	
Housing	316L SS, Monel®, Hastelloy® C
Diaphragm	316L SS, Monel®, Hastelloy® C, FKM
Construction	Two piece construction
Gasket Material	Buna N (FKM, PTFE optional)
Connection	Bottom: 1/4", 1/2", 3/4" and 1" NPTF Top: 1/4" and 1/2" NPTF
Process Temperature	-22°F to 212°F (-30°C to 100°C)
Other	Flushing connection available. Other materials such as PTFE, PVC, carbon steel, Alloy 20, Hastelloy® B, titanium, tantalum, etc. are available upon request

Hastelloy® is a registered trademark of Haynes International, Inc.
Monel® is a registered trademark of Inco Alloys International

Order Codes (products in bold are normally stock in North America)

Lower Housing (Bottom)	
316L SS, 1/4" NPTF	D70954
316L SS, 1/2" NPTF	D70956
316L SS, 1/2" NPTF with flushing	D70957
316L SS, 3/4" NPTF	D70963
316L SS, 3/4" NPTF with flushing	D70959
316L SS, 1" NPTF	D70964
316L SS, 1" NPTF with flushing	D70965
316L SS, 1/4" NPTF FKM	D70954V
316L SS, 1/2" NPTF FKM	D70956V
316L SS, 1/2" NPTF with flushing, FKM	D70957V
316L SS, 3/4" NPTF with flushing, FKM	D70959V
316L SS, 3/4" NPTF FKM	D70963V
316L SS, 1" NPTF FKM	D70964V
316L SS, 1" NPTF with flushing, FKM	D70965V
Monel®, 1/4" NPTF	D70954M
Monel®, 1/2" NPTF	D70956M
Monel®, 1/2" NPTF with flushing	D70957M
Monel®, 3/4" NPTF with flushing	D70959M
Monel®, 3/4" NPTF	D70963M
Monel®, 1" NPTF	D70964M
Monel®, 1" NPTF with flushing	D70965M
Hastelloy® C, 1/4" NPTF	D70954HASC
Hastelloy® C, 1/2" NPTF	D70956HASC
Hastelloy® C, 1/2" NPTF with flushing	D70957HASC
Hastelloy® C, 3/4" NPTF with flushing	D70959HASC
Hastelloy® C, 3/4" NPTF	D70963HASC
Hastelloy® C, 1" NPTF	D70964HASC
Hastelloy® C, 1" NPTF with flushing	D70965HASC

Upper Housing (Top)	
316L SS, 1/4" NPTF 316L SS diaphragm	D70950
316L SS, 1/4" NPTF Monel® diaphragm	D70950M
316L SS, 1/4" NPTF Hastelloy® C diaphragm	D70950HASC
316L SS, 1/4" NPTF FKM diaphragm	D70951
316L SS, 1/2" NPTF 316L SS diaphragm	D70952
316L SS, 1/2" NPTF Monel® diaphragm	D70952M
316L SS, 1/2" NPTF Hastelloy® C diaphragm	D70952HASC
316L SS, 1/2" NPTF FKM diaphragm	D70953

Option suffix for above order code only:
SF-D = Silicone fill (seal only)
FL-D = Fluorolube fill (seal only)
Other fill fluids (seal only) available upon request

Note: Both upper and lower housing must be specified
Example: D70950 - D70956

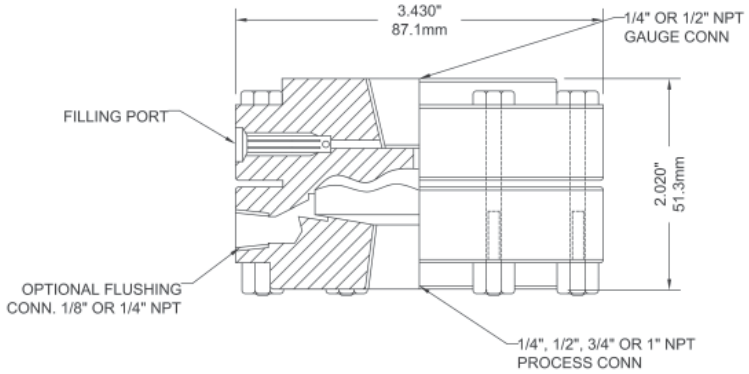

Hastelloy® is a registered trademark of Haynes International, Inc.
Monel® is a registered trademark of Inco Alloys International

D71 NACE 2-Piece Seal (Hastelloy® C)

30 to 2,500 psi (207 to 17,250 kPa)

Description & Features:

- Can be used on applications requiring a NACE compliant MR0103-2003 diaphragm seal
- ASME B40.100 compliant
- 5 year warranty

Applications:

- Sour gas applications requiring instrumentation that meet NACE International Standards

Specifications	
Housing	Hastelloy® C
Diaphragm	Hastelloy® C, welded
Construction	Two piece construction
Gasket Material	Buna N (FKM, PTFE optional)
Connection	Top: 1/4" and 1/2" NPTF Bottom: 1/4", 1/2", 3/4" and 1" NPTF
Process Temperature	-22°F to 212°F (-30°C to 100°C)
Other	Flushing connections available. Other materials available upon request.

Order Codes

Upper Housing (Top)	
Hast. C, 1/4" NPTF conn., Hastelloy® C diaphragm	D71966HASC75
Hast. C, 1/2" NPTF conn., Hastelloy® C diaphragm	D71967HASC75
Lower Housing (Bottom)	
Hastelloy® C, 1/4" NPTF	D71954HASC75
Hastelloy® C, 1/2" NPTF	D71956HASC75
Hastelloy® C, 1/2" NPTF with flushing	D71957HASC75
Hastelloy® C, 3/4" NPTF	D71963HASC75
Hastelloy® C, 3/4" NPTF with flushing	D71959HASC75
Hastelloy® C, 1" NPTF	D71964HASC75
Hastelloy® C, 1" NPTF with flushing	D71965HASC75

Option suffix for above order code only:

SF-D = Silicone fill (seal only)
FL-D = Fluorolube fill (seal only)
Other fill fluids (seal only) available upon request

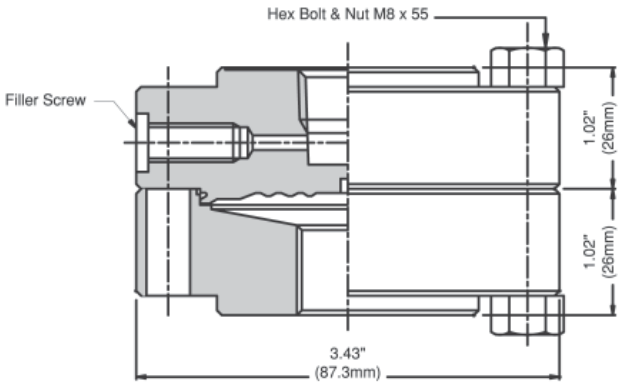

Hastelloy® is a registered trademark of Haynes International, Inc.

30 to 2,500 psi (207 to 17,250 kPa)

Description & Features:

- Can be used on applications requiring a NACE compliant MR0175-2003 diaphragm seal
- ASME B40.100 compliant
- 5 year warranty

Applications:

- Sour gas applications requiring instrumentation that meet NACE International Standards

Specifications	
Housing	316 SS
Diaphragm	Monel®, welded
Construction	Two piece construction
Gasket Material	Buna N (FKM, PTFE optional)
Connection	Top: 1/4" and 1/2" NPTF Bottom: 1/4", 1/2", 3/4" and 1" NPTF
Process Temperature	-22°F to 212°F (-30°C to 100°C)
Other	Flushing connections available. Other materials available upon request.

Order Codes

Upper Housing (Top)	
316 SS, 1/4" NPTF Monel® diaphragm	D7195003
316 SS, 1/2" NPTF Monel® diaphragm	D7195203
Lower Housing (Bottom)	
316 SS, 1/4" NPTF	D7195403
316 SS, 1/2" NPTF	D7195603
316 SS, 1/2" NPTF with flushing	D7195703
316 SS, 3/4" NPTF	D7196303
316 SS, 3/4" NPTF with flushing	D7195903
316 SS, 1" NPTF	D7196403
316 SS, 1" NPTF with flushing	D7196503

Option suffix for above order code only:

SF-D = Silicone fill (seal only)
FL-D = Fluorolube fill (seal only)
Other fill fluids (seal only) available upon request

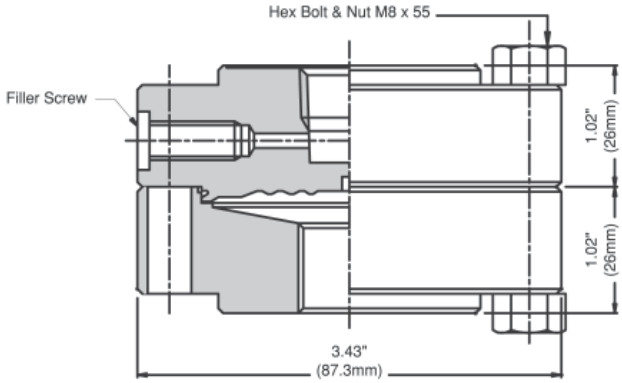

Monel® is a registered trademark of Inco Alloys International

D81 Isolation Ring

Vacuum to 1,000 psi (100 to 6,900 kPa)

Description & Features:

- Various materials and configurations available to fit your specific application
- Unique WinCONNECT fitting allows for easy field removal of gauge or switch for calibration, repair or replacement without interrupting process flow
- Thicker break-resistant instrument stem
- Optional tees for installation of multiple instruments
- ASME B40.100 compliant
- 5 year warranty

Applications:

- This isolation ring is ideal for measuring pressures of viscous or slurry media, utilizing a flow-through system that eliminates clogging or pressure blocking from occurring
- Designed for installation in water treatment facilities, mining and pulp & paper plants

Note: WinCONNECT comes standard with all D81 Isolation Rings

Order Codes

Specifications		
Sensor Type	WIR	Wafer, nests inside bolt circle
	RIR	Full flange (150# standard, 300# optional)
	SIR	Threaded connections
Pipe I.D.	1” - 48”	1” (25mm) up to 48” (1,220mm). Consult factory for larger sizes
Centre Section	C	Carbon Steel
	S	316 SS
End Plates	S	316 SS
	A	Acetal
	TEF	PTFE
	H	Hastelloy® C
	T	Titanium
	U	UHMW / Ultra High Molecular Weight Polyethylene
Elastomer (Sleeve)	N	Neoprene (-20°F to 220°F)
	B	Nitrile (Buna N) (-20°F to 180°F)
	E	EPDM (-20°F to 300°F)
	P	PTFE (-40°F to 400°F)
	V	Fluoroelastomer (FKM) (-4°F to 392°F)
	R	Natural rubber (-49°F to 212°F)
Fill Fluid	SF	Silicone (standard)
	GF	Glycerin
	GW	Glycerin and water
Instrument Connection	4N	1/4” NPTF
	2N	1/2” NPTF

Not all options are available with all sensor types

Hastelloy® is a registered trademark of Haynes International, Inc.
Hypalon® is a registered trademark of DuPont Performance Elastomers

Isolation Ring - Wafer Style (WIR)

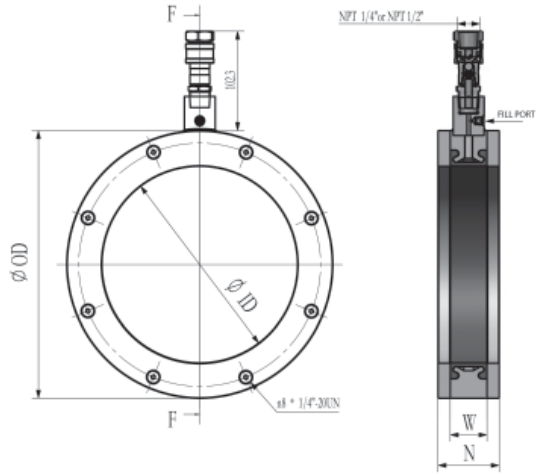

Dimensions				
Size	ID	OD	W	N
1”	1”	2.5”	1.24”	1.87”
2”	2.07”	4.00”	1.50”	2.13”
3”	3.07”	5.25”		
4”	4.03”	6.75”		
6”	5.99”	8.63”		2.25”
8”	7.98”	10.88”		2.50”
10”	10.02”	13.25”		2.75”
12”	12.00”	16.00”	1.75”	3.00”
14”	13.25”	17.63”		
16”	15.25”	20.13”		
18”	17.25”	21.50”		
20”	19.25”	23.75”		

Isolation Ring - Full Flange (RIR)

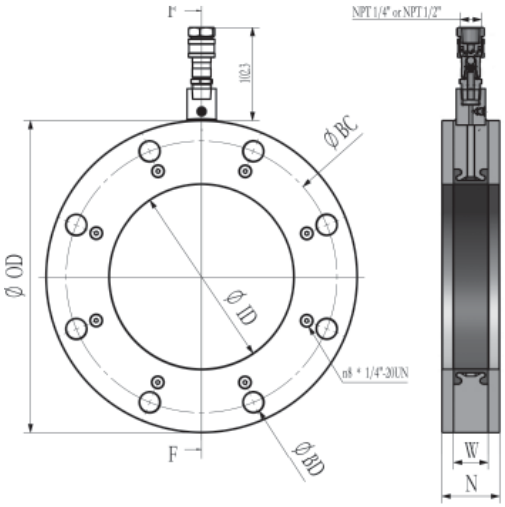

Dimensions								
ANSI ASME CLASS	Size	ID	OD	W	N	BC	BD	Number of Mounting Holes
150#	1”	1”	4.25”	1.24”	1.87”	3.27”	0.75”	4
	2”	2.07”	6.00”	1.50”	2.13”	4.75”	0.75”	4
	3”	3.07”	7.50”			6.00”		
	4”	4.03”	9.00”			7.50”		8
	6”	6.07”	11.00”		2.25”	9.50”	0.88”	
	8”	7.98”	13.50”		2.50”	11.75”		
	10”	10.02”	16.00”		2.75”	14.25”	1.00”	12
300#	2”	2.07”	6.50”		2.13”	5.00”	0.75”	8
	3”	3.07”	8.25”			6.62”	0.88”	
	4”	4.03”	10.00”			7.88”		
	6”	6.07”	12.50”		2.25”	10.62”		12
	8”	7.98”	15.00”		2.50”	13.00”	1.00”	
	10”	10.02”	17.50”		2.75”	15.25”	1.13”	16

Isolation Ring - Threaded (SIR)

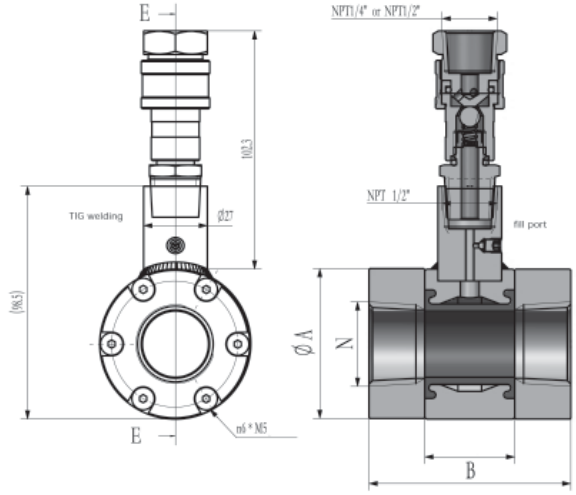

Dimensions		
Size N	A	B
0.5”	2.50”	2.87”
0.75”		
1”		3.37”
1.5”	3.25”	
2”	4.00”	
3”	5.25”	
4”	6.75”	4.12”

WinCONNECT Order Codes

Connection	Material	Code
1/2” Process x 1/4” Instrument	Stainless Steel	FIR0400
1/2” Process x 1/2” Instrument		FIR0200

D85 In Line Flow Thru Seal

30 to 600 psi (207 to 4,140 kPa)

Description & Features:

- Two piece construction
- Clean-out design allows process media to flow through the seal
- Reduces potential for process media blockages inside diaphragm housing
- ASME B40.100 compliant
- 5 year warranty

Applications:

- Where the process fluid is corrosive or viscous and would clog instrument internals/solidify within the pressure gauge, switch or transmitter

Specifications	
Housing	316 SS
Diaphragm	316 SS welded
Construction	Two piece construction
Connection	Instrument: 1/4", 1/2" NPTF Process: 1/4", 1/2", 3/4", 1" NPTF or socket weld
Process Temperature	-22°F to 302°F (-30°C to 150°C). Other ranges are available upon request
Other	Other materials such as carbon steel are available upon request

Order Codes

Lower Housing (process conn.)	Upper Housing (instrument conn.)	Code
1/4" NPTF	1/4" NPTF	D852536
	1/2" NPTF	D852537
1/4" Socket Weld	1/4" NPTF	D852538
	1/2" NPTF	D852539
1/2" NPTF	1/4" NPTF	D852540
	1/2" NPTF	D852541
1/2" Socket Weld	1/4" NPTF	D852542
	1/2" NPTF	D852543
3/4" NPTF	1/4" NPTF	D852544
	1/2" NPTF	D852545
3/4" Socket Weld	1/4" NPTF	D852546
	1/2" NPTF	D852547
1" NPTF	1/4" NPTF	D852690
	1/2" NPTF	D852691
1" Socket Weld	1/4" NPTF	D852692
	1/2" NPTF	D852693

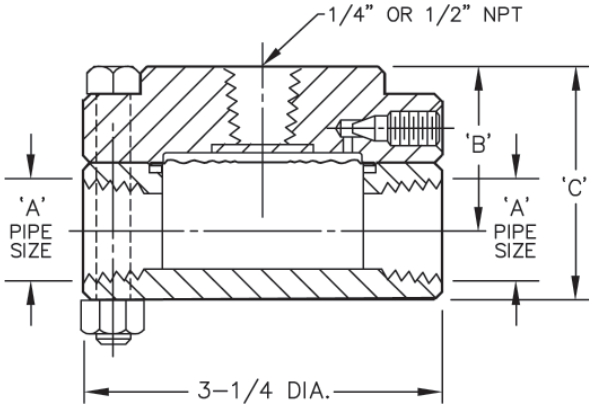

A (NPT)	B	C
1/4"	1.25"	1.625"
1/2"	1.5"	2.125"
3/4"	1.625"	2.375"
1"	1.75"	2.625"

Option suffix for above order code only:

SF-D = Silicone fill (seal only)
FL-D = Fluorolube fill (seal only)
Other fill fluids (seal only) available upon request

Larger displacement diaphragms and other materials available upon request.

30 to 600 psi (207 to 4,140 kPa)

Description & Features:

- Finished with a cleanout design
- Various pipe sizes 1” (25mm) to 4” (100mm) and housing materials available
- ASME B40.100 compliant
- 5 year warranty

Applications:

- Used in industrial applications such as oil refineries, pulp and paper mills and chemical plants

Specifications	
Housing	316 SS standard. Steel, nickel, 304 SS, acetal, Hastelloy® B available upon request
Diaphragm	316 SS, Monel®, Hastelloy® C, FKM standard. Nickel, PTFE, tantalum, 304 SS, acetal, Hastelloy® B available upon request
Construction	Two piece construction
Connection	1/4”, 1/2” NPTF gauge connections standard (Other NPTF gauges connections available). 1” (25mm), 1.5” (40mm), 2” (50mm), 3” (75mm), 4” (100mm) pipe size standard
Maximum Temperature Limit	450°F (232°C) FKM: 350°F (176°C) (Higher temperature limits available)
Other	Cleanout type for easy cleaning and calibrating

Order Codes

Pipe Size	Diaphragm	Instrument Conn.	Code
1” (25mm)	316 SS	1/4”	D902564
		1/2”	D902560
	Hastelloy® C	1/4”	D902565
		1/2”	D902561
	Monel®	1/4”	D902566
		1/2”	D902562
	FKM	1/4”	D902570
		1/2”	D902563
1.5” (40mm)	316 SS	1/4”	D902575
		1/2”	D902571
	Hastelloy® C	1/4”	D902576
		1/2”	D902572
	Monel®	1/4”	D902577
		1/2”	D902573
	FKM	1/4”	D902578
		1/2”	D902574
2” (50mm)	316 SS	1/4”	D902583
		1/2”	D902579
	Hastelloy® C	1/4”	D902584
		1/2”	D902580
	Monel®	1/4”	D902585
		1/2”	D902581
	FKM	1/4”	D902586
		1/2”	D902582

Hastelloy® is a registered trademark of Haynes International, Inc.
Monel® is a registered trademark of Inco Alloys International

Order Codes

Pipe Size	Diaphragm	Instrument Conn.	Code
3" (75mm)	316 SS	1/4"	D902595
		1/2"	D902587
	Hastelloy® C	1/4"	D902596
		1/2"	D902592
	Monel®	1/4"	D902597
		1/2"	D902593
	FKM	1/4"	D902598
		1/2"	D902594
4" (100mm)	316 SS	1/4"	D902695
		1/2"	D902599
	Hastelloy® C	1/4"	D902696
		1/2"	D902608
	Monel®	1/4"	D902697
		1/2"	D902609
	FKM	1/4"	D902698
		1/2"	D902694

Larger displacement diaphragms and pipe sizes more than 4" available upon request.

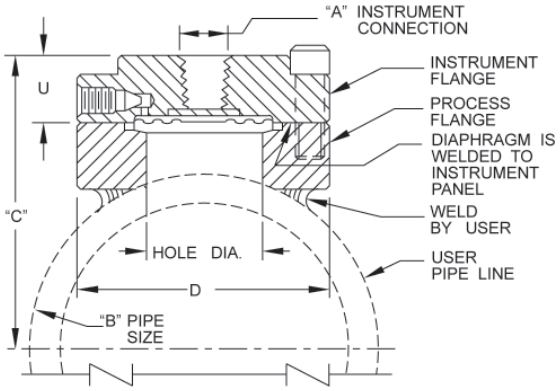

Diaphragm Type	Instrument Connection A	Pipe Size B	C	D	U	Hole Diameter
Welded, std.	1/4", 1/2" NPT	1"	2.13" (55mm)	3.5" (89mm)	0.88" (22mm)	1" (25mm)
		1.5"	2.38" (60mm)			1.5" (38mm)
		2"	2.63" (67mm)			
		3"	3.25" (83mm)			
		4"	3.81" (97mm)			
Welded, large		1"	2.13" (55mm)	4.25" (108mm)		1" (25mm)
		1.5"	2.38" (60mm)			1.5" (38mm)
		2"	2.63" (67mm)			
		3"	3.25" (83mm)			
		4"	3.81" (97mm)			
FKM		1"	2.13" (55mm)	3.5" (89mm)	1" (25mm)	1" (25mm)
		1.5"	2.38" (60mm)			1.5" (38mm)
		2"	2.63" (67mm)			
		3"	3.25" (83mm)			

Hastelloy® is a registered trademark of Haynes International, Inc.
Monel® is a registered trademark of Inco Alloys International

Description & Features:

- Excellent flow regulation and leak tight
- The one-piece body construction (no welding) provides strength, safety and corrosion resistance
- "Slow opening" prevents sudden pressure surge and instrument damage
- Materials include carbon steel, carbon steel NACE, stainless steel, stainless steel NACE
- Available in Hard Seat (6,000 and 10,000 psi)
- ASME B1.20.1 compliant
- CRN registered
- 5 year warranty

Applications:

- Highly reliable throttle and block valve for gas or liquid service in severe duty oil and gas installations including refineries and processing plants as well as water treatment plants, power plants and hydraulic applications

Order Codes (products in bold are normally stock in North America)

NPT Connection	Material	Max. Pressure	Code
1/4" Female x 1/4" Female	Carbon Steel	6,000 psi	NVA5020
		10,000 psi	NVA6020
1/4" Male x 1/4" Female		6,000 psi	NVA5000
		10,000 psi	NVA6000
3/8" Female x 3/8" Female		6,000 psi	NVA5024
		10,000 psi	NVA6024
3/8" Male x 3/8" Female		6,000 psi	NVA5004
		10,000 psi	NVA6004
1/2" Female x 1/2" Female		6,000 psi	NVA5021
		10,000 psi	NVA6021
1/2" Male x 1/2" Female		6,000 psi	NVA5001
		10,000 psi	NVA6001
3/4" Female x 1/2" Female		6,000 psi	NVA5022
		10,000 psi	NVA6022
3/4" Male x 1/2" Female		6,000 psi	NVA5002
		10,000 psi	NVA6002
3/4" Female x 3/4" Female		6,000 psi	NVA5025
		10,000 psi	NVA6025
3/4" Male x 3/4" Female		6,000 psi	NVA5005
		10,000 psi	NVA6005
1" Female x 1" Female		6,000 psi	NVA5023
		10,000 psi	NVA6023
1" Male x 1" Female		6,000 psi	NVA5003
		10,000 psi	NVA6003
1/4" Female x 1/4" Female	Stainless Steel	6,000 psi	NVA2020
		10,000 psi	NVA3020
1/4" Male x 1/4" Female		6,000 psi	NVA2000
		10,000 psi	NVA3000
3/8" Female x 3/8" Female		6,000 psi	NVA2024
		10,000 psi	NVA3024
3/8" Male x 3/8" Female		6,000 psi	NVA2004
		10,000 psi	NVA3004
1/2" Female x 1/2" Female		6,000 psi	NVA2021
		10,000 psi	NVA3021
1/2" Male x 1/2" Female		6,000 psi	NVA2001
		10,000 psi	NVA3001
3/4" Female x 1/2" Female		6,000 psi	NVA2022
		10,000 psi	NVA3022
3/4" Male x 1/2" Female		6,000 psi	NVA2002
		10,000 psi	NVA3002
3/4" Female x 3/4" Female		6,000 psi	NVA2025
		10,000 psi	NVA3025
3/4" Male x 3/4" Female		6,000 psi	NVA2005
		10,000 psi	NVA3005
1" Female x 1" Female		6,000 psi	NVA2023
		10,000 psi	NVA3023
1" Male x 1" Female		6,000 psi	NVA2003
		10,000 psi	NVA3003

NPT Connection	Material	Max. Pressure	Code
1/4" Female x 1/4" Female	Carbon Steel (NACE Tip)	6,000 psi	NVA5020N
		10,000 psi	NVA6020N
1/4" Male x 1/4" Female		6,000 psi	NVA5000N
		10,000 psi	NVA6000N
3/8" Female x 3/8" Female		6,000 psi	NVA5024N
		10,000 psi	NVA6024N
3/8" Male x 3/8" Female		6,000 psi	NVA5004N
		10,000 psi	NVA6004N
1/2" Female x 1/2" Female		6,000 psi	NVA5021N
		10,000 psi	NVA6021N
1/2" Male x 1/2" Female		6,000 psi	NVA5001N
		10,000 psi	NVA6001N
3/4" Female x 1/2" Female		6,000 psi	NVA5022N
		10,000 psi	NVA6022N
3/4" Male x 1/2" Female		6,000 psi	NVA5002N
		10,000 psi	NVA6002N
3/4" Female x 3/4" Female		6,000 psi	NVA5025N
		10,000 psi	NVA6025N
3/4" Male x 3/4" Female		6,000 psi	NVA5005N
		10,000 psi	NVA6005N
1" Female x 1" Female		6,000 psi	NVA5023N
		10,000 psi	NVA6023N
1" Male x 1" Female		6,000 psi	NVA5003N
		10,000 psi	NVA6003N
1/4" Female x 1/4" Female	Stainless Steel NACE	6,000 psi	NVA2020N
		10,000 psi	NVA3020N
1/4" Male x 1/4" Female		6,000 psi	NVA2000N
		10,000 psi	NVA3000N
3/8" Female x 3/8" Female		6,000 psi	NVA2024N
		10,000 psi	NVA3024N
3/8" Male x 3/8" Female		6,000 psi	NVA2004N
		10,000 psi	NVA3004N
1/2" Female x 1/2" Female		6,000 psi	NVA2021N
		10,000 psi	NVA3021N
1/2" Male x 1/2" Female		6,000 psi	NVA2001N
		10,000 psi	NVA3001N
3/4" Female x 1/2" Female		6,000 psi	NVA2022N
		10,000 psi	NVA3022N
3/4" Male x 1/2" Female		6,000 psi	NVA2002N
		10,000 psi	NVA3002N
3/4" Female x 3/4" Female		6,000 psi	NVA2025N
		10,000 psi	NVA3025N
3/4" Male x 3/4" Female		6,000 psi	NVA2005N
		10,000 psi	NVA3005N
1" Female x 1" Female		6,000 psi	NVA2023N
		10,000 psi	NVA3023N
1" Male x 1" Female		6,000 psi	NVA2003N
		10,000 psi	NVA3003N

Option suffix:

CPM = Carbon steel panel mount kit SPM = Stainless steel panel mount kit

Needle Valve (Straight Body, Hard Seat)

Material

Description	Component Number	Carbon Steel	Carbon Steel NACE	Stainless Steel	Stainless Steel NACE
Body	1	Carbon Steel	Carbon Steel	316 SS	316 SS NACE
Bonnet	2	Carbon Steel	Carbon Steel	316 SS	316 SS NACE
Adapter Locknut	3	Carbon Steel	Carbon Steel	304 SS	304 SS
Adapter	4	316 SS	316 SS NACE	316 SS	316 SS NACE
Dustcap	5	Nylon	Nylon	Nylon	Nylon
Handle	6	Carbon Steel	Carbon Steel	304 SS	304 SS
Screw	7	304 SS	304 SS	304 SS	304 SS
Fastening Screw	8	304 SS	304 SS	304 SS	304 SS
Needle / Needle Tip	9	316 SS	316 SS NACE	316 SS	316 SS NACE
Gland Washer	10	Carbon Steel	Carbon Steel	304 SS	304 SS
Gland Packing	11	PTFE/Graphite	PTFE/Graphite	PTFE/Graphite	PTFE/Graphite
Dwell Pin	12	Carbon Steel	Carbon Steel	304 SS	304 SS
Gland Packing	13	PTFE/Graphite	PTFE/Graphite	PTFE/Graphite	PTFE/Graphite

Female x Female

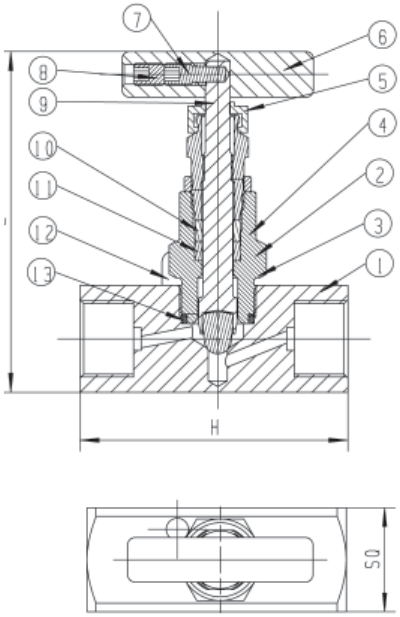

Male x Female

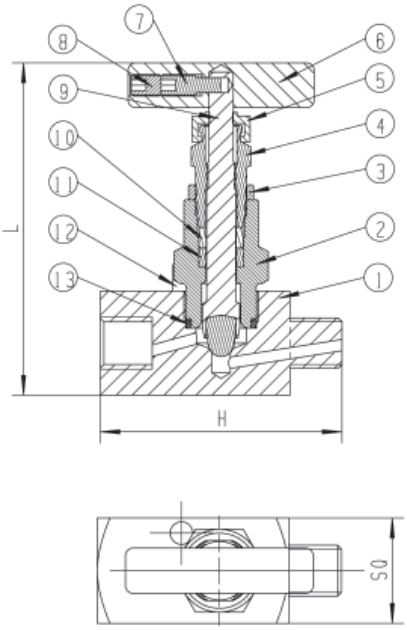

Dimensions

Size	H	L	SQ
1/4” Female x 1/4” Female	2.56” (65mm)	3.50” (89mm)	1.10” (28mm)
1/4” Male x 1/4” Female	2.56” (65mm)	3.50” (89mm)	1.10” (28mm)
3/8” Female x 3/8” Female	2.56” (65mm)	3.50” (89mm)	1.10” (28mm)
3/8” Male x 3/8” Female	2.56” (65mm)	3.50” (89mm)	1.10” (28mm)
1/2” Female x 1/2” Female	2.76” (70mm)	3.50” (89mm)	1.10” (28mm)
1/2” Male x 1/2” Female	2.76” (70mm)	3.50” (89mm)	1.10” (28mm)
3/4” Female x 1/2” Female	2.83” (72mm)	3.66” (93mm)	1.26” (32mm)
3/4” Male x 1/2” Female	2.83” (72mm)	3.50” (89mm)	1.10” (28mm)
3/4” Female x 3/4” Female	2.83” (72mm)	3.66” (93mm)	1.26” (32mm)
3/4” Male x 3/4” Female	2.83” (72mm)	3.66” (93mm)	1.26” (32mm)
1” Female x 1” Female	3.23” (82mm)	3.98” (101mm)	1.58” (40mm)
1” Male x 1” Female	3.23” (82mm)	3.98” (101mm)	1.58” (40mm)

Panel Mont Kit (CPM/SPM)

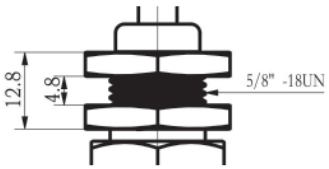

Description & Features:

- Excellent flow regulation and leak tight
- The one-piece body construction (no welding) provides strength, safety and corrosion resistance
- "Slow opening" prevents sudden pressure surge and instrument damage
- Material includes stainless steel and stainless steel NACE
- Available in Hard Seat (6,000 and 10,000 psi)
- ASME B1.20.1 compliant
- CRN registered
- 5 year warranty

Applications:

- Ideally suited for severe duty oil and gas installations including refineries and processing plants as well as water treatment plants, power plants and hydraulic applications

Angle Body Order Codes (products in bold are normally stock in North America)

NPT Connection	Material	Max. Pressure	Code
1/4" Female x 1/4" Female	Stainless Steel	6,000 psi	NVA8020
		10,000 psi	NVA9020
1/4" Male x 1/4" Female		6,000 psi	NVA8000
		10,000 psi	NVA9000
3/8" Female x 3/8" Female		6,000 psi	NVA8024
		10,000 psi	NVA9024
3/8" Male x 3/8" Female		6,000 psi	NVA8004
		10,000 psi	NVA9004
1/2" Female x 1/2" Female		6,000 psi	NVA8021
		10,000 psi	NVA9021
1/2" Male x 1/2" Female		6,000 psi	NVA8001
		10,000 psi	NVA9001
3/4" Female x 1/2" Female		6,000 psi	NVA8022
		10,000 psi	NVA9022
3/4" Male x 1/2" Female		6,000 psi	NVA8002
		10,000 psi	NVA9002
3/4" Female x 3/4" Female		6,000 psi	NVA8025
		10,000 psi	NVA9025
3/4" Male x 3/4" Female		6,000 psi	NVA8005
		10,000 psi	NVA9005
1" Female x 1" Female		6,000 psi	NVA8023
		10,000 psi	NVA9023
1" Male x 1" Female		6,000 psi	NVA8003
		10,000 psi	NVA9003

Angle Body NACE Order Codes

NPT Connection	Material	Max. Pressure	Code
1/4" Female x 1/4" Female	Stainless Steel NACE	6,000 psi	NVA8020N
		10,000 psi	NVA9020N
1/4" Male x 1/4" Female		6,000 psi	NVA8000N
		10,000 psi	NVA9000N
3/8" Female x 3/8" Female		6,000 psi	NVA8024N
		10,000 psi	NVA9024N
3/8" Male x 3/8" Female		6,000 psi	NVA8004N
		10,000 psi	NVA9004N
1/2" Female x 1/2" Female		6,000 psi	NVA8021N
		10,000 psi	NVA9021N
1/2" Male x 1/2" Female		6,000 psi	NVA8001N
		10,000 psi	NVA9001N
3/4" Female x 1/2" Female		6,000 psi	NVA8022N
		10,000 psi	NVA9022N
3/4" Male x 1/2" Female		6,000 psi	NVA8002N
		10,000 psi	NVA9002N
3/4" Female x 3/4" Female		6,000 psi	NVA8025N
		10,000 psi	NVA9025N
3/4" Male x 3/4" Female		6,000 psi	NVA8005N
		10,000 psi	NVA9005N
1" Female x 1" Female		6,000 psi	NVA8023N
		10,000 psi	NVA9023N
1" Male x 1" Female		6,000 psi	NVA8003N
		10,000 psi	NVA9003N

Option suffix:

CPM = Carbon steel panel mount kit SPM = Stainless steel panel mount kit

Needle Valve (Angle Body, Hard Seat)

Material

Description	Component Number	Stainless Steel	Stainless Steel NACE
Body	1	316 SS	316 SS NACE
Bonnet	2	316 SS	316 SS NACE
Dustcap	3	Nylon	Nylon
Needle / Needle Tip	4	316 SS	316 SS NACE
Handle	5	304 SS	304 SS
Screw	6	304 SS	304 SS
Fastening Screws	7	304 SS	304 SS
O-ring	8	FKM	FKM
Dwell Pin	9	304 SS	304 SS

Female x Female

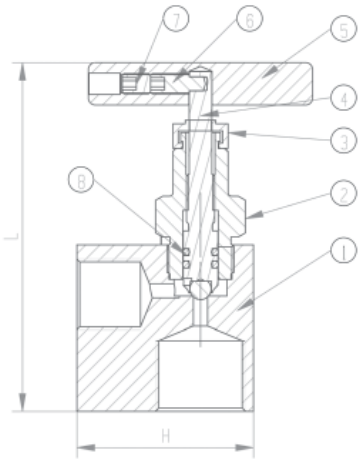

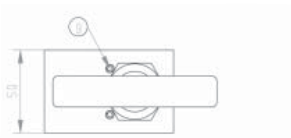

Male x Female

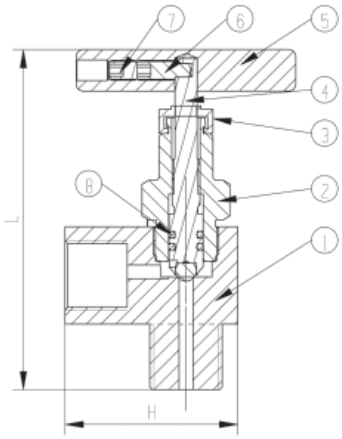

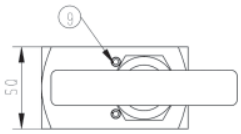

Panel Mont Kit (CPM/SPM)

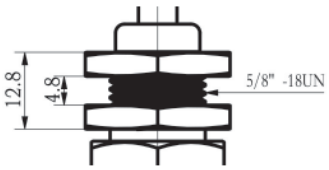

Panel Mont Kit (CPM/SPM)

Dimensions

Size	H	L	SQ
1/4" Female x 1/4" Female	1.81" (46mm)	3.66" (93mm)	1.10" (28mm)
1/4" Male x 1/4" Female	1.77" (45mm)	3.58" (91mm)	1.10" (28mm)
3/8" Female x 3/8" Female	1.81" (46mm)	3.66" (93mm)	1.10" (28mm)
3/8" Male x 3/8" Female	1.77" (45mm)	3.82" (97mm)	1.10" (28mm)
1/2" Female x 1/2" Female	1.97" (50mm)	3.82" (97mm)	1.10" (28mm)
1/2" Male x 1/2" Female	1.97" (50mm)	3.82" (97mm)	1.10" (28mm)
3/4" Female x 1/2" Female	1.97" (50mm)	3.82" (97mm)	1.26" (32mm)
3/4" Male x 1/2" Female	1.97" (50mm)	3.86" (98mm)	1.10" (28mm)
3/4" Female x 3/4" Female	1.97" (50mm)	3.82" (97mm)	1.26" (32mm)
3/4" Male x 3/4" Female	1.97" (50mm)	3.86" (98mm)	1.26" (32mm)
1" Female x 1" Female	2.48" (63mm)	4.41" (112mm)	1.58" (40mm)
1" Male x 1" Female	2.48" (63mm)	4.41" (112mm)	1.58" (40mm)

Description & Features:

- Excellent flow regulation and leak tight
- The one-piece body construction (no welding) provides strength, safety and corrosion resistance
- “Slow opening” prevents sudden pressure surge and instrument damage
- Materials include carbon steel and stainless steel
- Available in Soft Seat (6,000 psi, Delrin seat)
- ASME B1.20.1 compliant
- CRN registered
- 5 year warranty

Applications:

- Ideally suited for severe duty oil and gas installations including refineries and processing plants, water treatment plants, power plants and hydraulic applications

Order Codes (products in bold are normally stock in North America)

NPT Connection	Material	Code
1/4” Female x 1/4” Female	Carbon Steel	NVA4020
1/4” Male x 1/4” Female		NVA4000
3/8” Female x 3/8” Female		NVA4024
3/8” Male x 3/8” Female		NVA4004
1/2” Female x 1/2” Female		NVA4021
1/2” Male x 1/2” Female		NVA4001
3/4” Female x 1/2” Female		NVA4022
3/4” Male x 1/2” Female		NVA4002
3/4” Female x 3/4” Female		NVA4025
3/4” Male x 3/4” Female		NVA4005
1” Female x 1” Female		NVA4023
1” Male x 1” Female		NVA4003
1/4” Female x 1/4” Female	Stainless Steel	NVA1020
1/4” Male x 1/4” Female		NVA1000
3/8” Female x 3/8” Female		NVA1024
3/8” Male x 3/8” Female		NVA1004
1/2” Female x 1/2” Female		NVA1021
1/2” Male x 1/2” Female		NVA1001
3/4” Female x 1/2” Female		NVA1022
3/4” Male x 1/2” Female		NVA1002
3/4” Female x 3/4” Female		NVA1025
3/4” Male x 3/4” Female		NVA1005
1” Female x 1” Female		NVA1023
1” Male x 1” Female		NVA1003

Material

Description	Component Number	Carbon Steel	Stainless Steel
Body	1	Carbon Steel	316 SS
Bonnet	2	Carbon Steel	316 SS
Dustcap	3	Nylon	Nylon
Needle / Needle Tip	4	316 SS	316 SS
Handle	5	Carbon Steel	304 SS
Screw	6	304 SS	304 SS
Fastening Screw	7	304 SS	304 SS
O-ring	8	FKM	FKM
Seat	9	Delrin	Delrin
Slotted Spring Pin	10	304 SS	304 SS

Dimensions

Size	H	L	SQ
1/4” Female x 1/4” Female	2.56” (65mm)	2.65” (67mm)	1.10” (28mm)
1/4” Male x 1/4” Female	2.56” (65mm)	2.65” (67mm)	1.10” (28mm)
3/8” Female x 3/8” Female	2.56” (65mm)	2.65” (67mm)	1.10” (28mm)
3/8” Male x 3/8” Female	2.56” (65mm)	2.65” (67mm)	1.10” (28mm)
1/2” Female x 1/2” Female	2.76” (70mm)	2.65” (67mm)	1.10” (28mm)
1/2” Male x 1/2” Female	2.76” (70mm)	2.65” (67mm)	1.10” (28mm)
3/4” Female x 1/2” Female	2.84” (72mm)	2.80” (71mm)	1.26” (32mm)
3/4” Male x 1/2” Female	2.84” (72mm)	2.65” (67mm)	1.10” (28mm)
3/4” Female x 3/4” Female	2.84” (72mm)	2.80” (71mm)	1.26” (32mm)
3/4” Male x 3/4” Female	2.84” (72mm)	2.80” (71mm)	1.26” (32mm)
1” Female x 1” Female	3.23” (82mm)	3.12” (79mm)	1.58” (40mm)
1” Male x 1” Female	3.23” (82mm)	3.12” (79mm)	1.58” (40mm)

Option suffix:

CPM = Carbon steel panel mount kit SPM = Stainless steel panel mount kit

Female x Female

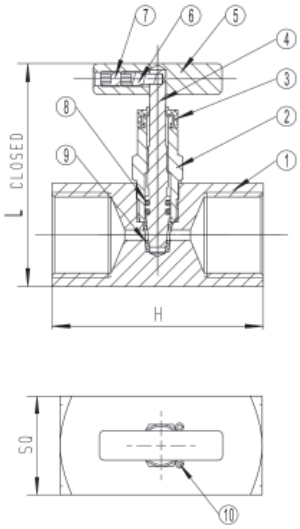

Male x Female

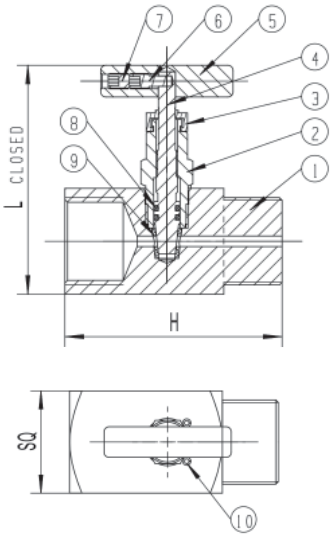

Panel Mont Kit (CPM/SPM)

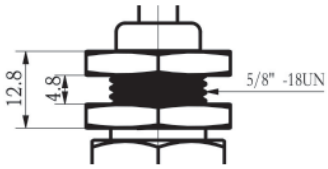

NVA Needle Valve (Multiport)

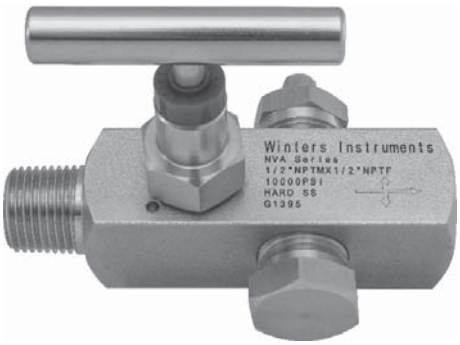

Description & Features:

- Multiport design reduces the number of gauge and other instrument connections to permanent piping installations, decreasing possible leak paths
- Optional bleed plugs further allow pressure to be bled off without disturbing the permanent piping installation
- 10,000 psi pressure rating @ 200°F
- All stems are 316 stainless steel
- CRN registered
- 5 year warranty

Applications:

- Ideally suited for severe duty oil and gas installations including refineries and processing plants as well as water treatment plants, power plants and hydraulic applications

Multiport Order Codes

NPT Connection	Material	Seat	Max. Pressure	Code
1/2" Male x 1/2" Female	Carbon Steel	Soft Seat	6,000 psi	NVA4201
3/4" Male x 1/2" Female				NVA4202
1/2" Male x 1/2" Female	Stainless Steel			NVA1201
3/4" Male x 1/2" Female				NVA1202
1/2" Male x 1/2" Female	Carbon Steel	Hard Seat	10,000 psi	NVA6201
3/4" Male x 1/2" Female				NVA6202
1/2" Male x 1/2" Female	Stainless Steel			NVA3201
3/4" Male x 1/2" Female				NVA3202

Multiport NACE Order Codes

NPT Connection	Material	Seat	Max. Pressure	Code
1/2" Male x 1/2" Female	Stainless Steel NACE	Hard Seat	10,000 psi	NVA3201N
3/4" Male x 1/2" Female				NVA3202N

Multiport Optional Bleed Screw and Plug Order Codes

Plug or Screw	Carbon Steel	Stainless Steel	Stainless Steel NACE
M8 Bleed Screw	NVAPLUG02	NVAPLUG01	NVAPLUG01N
1/2" NPT Plug	NVAPLUG06	NVAPLUG05	NVAPLUG05N
1/2" NPT Plug w/Bleed Screw	NVAPLUG08	NVAPLUG07	NVAPLUG07N

Note: Bleed screw and plugs not included

Hard Seat Material

Description	Component Number	Carbon Steel Hard Seat	Stainless Steel Hard Seat	Stainless Steel NACE Hard Seat
Body	1	Carbon Steel	316 SS	316 SS NACE
Bonnet	2	Carbon Steel	316 SS	316 SS NACE
Dustcap	3	Nylon	Nylon	Nylon
Needle / Needle Tip	4	316 SS	316 SS	316 SS NACE
Handle	5	Carbon Steel	304 SS	304 SS
Screw	6	304 SS	304 SS	304 SS
Fastening Screw	7	304 SS	304 SS	304 SS
O-ring	8	FKM	FKM	FKM
Dwell Pin	9	304 SS	304 SS	304 SS
Vent Plug	10	Carbon Steel	316 SS	316 SS NACE
Bleed Screw	11	Carbon Steel	316 SS	316 SS NACE
Vent Plug	12	Carbon Steel	316 SS	316 SS NACE

Hard Seat Dimensions

Size	H	L	SQ1	SQ2
1/2" Male x 1/2" Female	4.13 (105mm)	3.2 (81mm)	1.42 (36mm)	1.10 (28mm)
3/4" Male x 1/2" Female	4.29 (109mm)	3.2 (81mm)	1.42 (36mm)	1.10 (28mm)

Male x Female

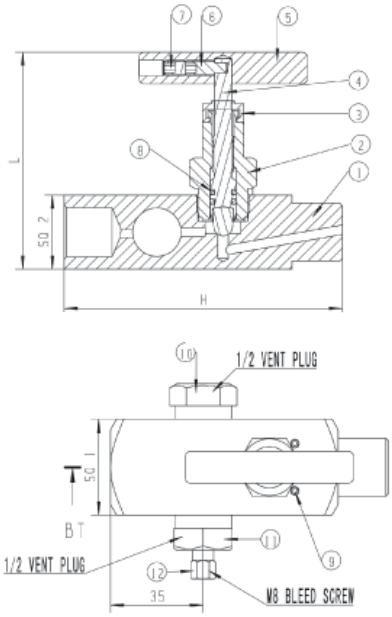

Soft Seat Material

Description	Component Number	Carbon Steel Soft Seat	Stainless Steel Soft Seat
Body	1	Carbon Steel	316 SS
Bonnet	2	Carbon Steel	316 SS
Dustcap	3	Nylon	Nylon
Needle / Needle Tip	4	316 SS	316 SS
Handle	5	Carbon Steel	304 SS
Screw	6	304 SS	304 SS
Fastening Screw	7	304 SS	304 SS
O-ring	8	FKM	FKM
Seat	9	Delrin	Delrin
Dwell Pin	10	304 SS	304 SS
Vent Plug	11	Carbon Steel	316 SS
Bleed Screw	12	Carbon Steel	316 SS
Vent Plug	13	Carbon Steel	316 SS

Soft Seat Dimensions

Size	H	L	SQ1	SQ2
1/2" Male x 1/2" Female	4.13 (105mm)	3.20" (81mm)	1.42 (36mm)	1.10 (28mm)
3/4" Male x 1/2" Female	4.29 (109mm)	3.20" (81mm)	1.42 (36mm)	1.10 (28mm)

Male x Female

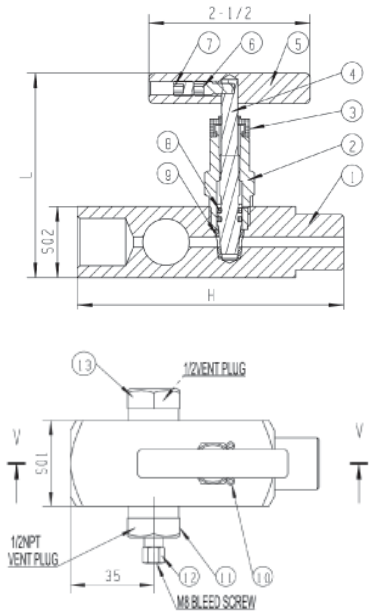

BBV Block & Bleed Valve Single Handle

Description & Features:

- Block & bleed design allows pressure to be bled off without disturbing the permanent piping installation, allowing quick and easy removal or replacement of instruments
- Available in Soft Seat (6,000 psi) and Hard Seat (10,000 psi)
- All stems are 316 stainless steel
- CRN registered
- 5 year warranty

Applications:

- Ideally suited for severe duty oil and gas installations including refineries and processing plants as well as water treatment plants, power plants and hydraulic applications where venting of media is required

Single Handle Order Codes (products in bold are normally stock in North America)

NPT Connection	Material	Seat	Max. Pressure	Code
1/4" Female x 1/4" Female	Carbon Steel	Soft Seat	6,000 psi	BBV4020
1/4" Male x 1/4" Female				BBV4000
1/2" Female x 1/2" Female				BBV4021
1/2" Male x 1/2" Female				BBV4001
1/4" Female x 1/4" Female	Stainless Steel			BBV1020
1/4" Male x 1/4" Female				BBV1000
1/2" Female x 1/2" Female				BBV1021
1/2" Male x 1/2" Female				BBV1001
1/4" Female x 1/4" Female	Carbon Steel	Hard Seat	10,000 psi	BBV6020
1/4" Male x 1/4" Female				BBV6000
1/2" Female x 1/2" Female				BBV6021
1/2" Male x 1/2" Female				BBV6001
1/4" Female x 1/4" Female	Stainless Steel			BBV3020
1/4" Male x 1/4" Female				BBV3000
1/2" Female x 1/2" Female				BBV3021
1/2" Male x 1/2" Female				BBV3001

Single Handle NACE Order Codes

NPT Connection	Material	Seat	Max. Pressure	Code
1/4" Female x 1/4" Female	Stainless Steel NACE	Hard Seat	10,000 psi	BBV3020N
1/4" Male x 1/4" Female				BBV3000N
1/2" Female x 1/2" Female				BBV3021N
1/2" Male x 1/2" Female				BBV3001N

Replacement Bleed Screw Order Codes

Plug or Screw	Carbon Steel	Stainless Steel	Stainless Steel NACE
M8 Bleed Screw	NVAPLUG02	NVAPLUG01	NVAPLUG01N

Hard Seat Material

Description	Component Number	Carbon Steel Hard Seat	Stainless Steel Hard Seat	Stainless Steel NACE Hard Seat
Body	1	Carbon Steel	316 SS	316 SS NACE
Bonnet	2	Carbon Steel	316 SS	316 SS NACE
Dustcap	3	Nylon	Nylon	Nylon
Needle / Needle Tip	4	316 SS	316 SS	316 SS NACE
Handle	5	Carbon Steel	304 SS	304 SS
Screw	6	304 SS	304 SS	304 SS
Fastening Screw	7	304 SS	304 SS	304 SS
O-ring	8	FKM	FKM	FKM
Dwell Pin	9	304 SS	304 SS	304 SS
Bleed Screw	10	Carbon Steel	316 SS	316 SS NACE

Female x Female

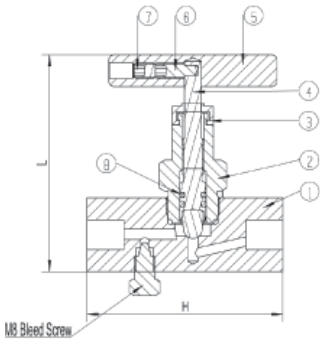

Male x Female

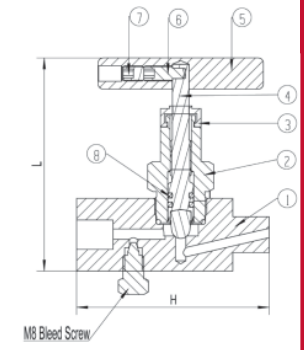

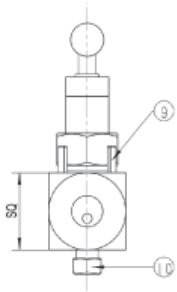

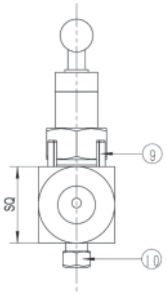

Hard Seat Dimensions

Size	H	L	SQ
1/4" Female x 1/4" Female	2.91" (74mm)	3.25" (83mm)	1.10" (28mm)
1/4" Male x 1/4" Female	2.91" (74mm)	3.25" (83mm)	1.10" (28mm)
1/2" Female x 1/2" Female	2.91" (74mm)	3.25" (83mm)	1.10" (28mm)
1/2" Male x 1/2" Female	2.91" (74mm)	3.25" (83mm)	1.10" (28mm)

Soft Seat Material

Description	Component Number	Carbon Steel Soft Seat	Stainless Steel Soft Seat
Body	1	Carbon Steel	316 SS
Bonnet	2	Carbon Steel	316 SS
Dustcap	3	Nylon	Nylon
Needle / Needle Tip	4	316 SS	316 SS
Handle	5	Carbon Steel	304 SS
Screw	6	304 SS	304 SS
Fastening Screw	7	304 SS	304 SS
O-ring	8	FKM	FKM
Seat	9	Delrin	Delrin
Dwell Pin	10	304 SS	304 SS
Bleed Screw	11	Carbon Steel	316 SS

Female x Female

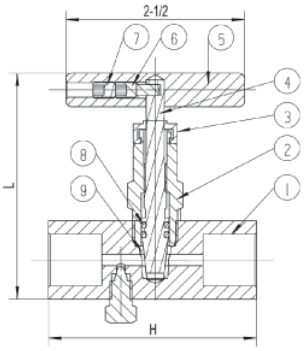

Male x Female

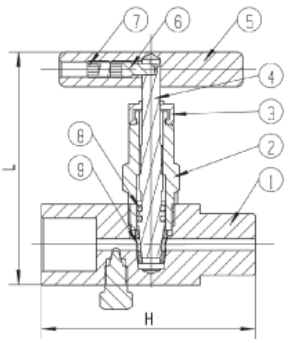

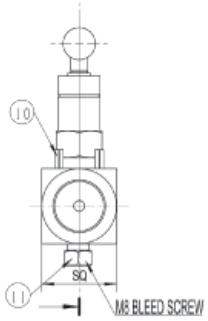

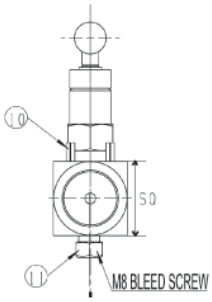

Soft Seat Dimensions

Size	H	L	SQ
1/4" Female x 1/4" Female	2.91" (74mm)	3.20" (81mm)	1.10" (28mm)
1/4" Male x 1/4" Female	2.91" (74mm)	3.20" (81mm)	1.10" (28mm)
1/2" Female x 1/2" Female	2.91" (74mm)	3.20" (81mm)	1.10" (28mm)
1/2" Male x 1/2" Female	2.91" (74mm)	3.20" (81mm)	1.10" (28mm)

BBV Block & Bleed Valve Two Handles

Description & Features:

- The one-piece body construction (no welding) provides strength and corrosion resistance
- Block & bleed design allows pressure to be bled off without disturbing the permanent piping installation, allowing quick and easy removal or replacement of instruments
- Available in Soft Seat (6,000 psi) and Hard Seat (10,000 psi)
- All stems are 316 stainless steel
- CRN registered
- 5 year warranty

Applications:

- Ideally suited for severe duty oil and gas installations including refineries and processing plants as well as water treatment plants, power plants and hydraulic applications where controlled venting of media is required

Block & Bleed Two Handle Order Codes (products in bold are normally stock in North America)

NPT Connection	Material	Seat	Max. Pressure	Code
1/4" Female x 1/4" Female	Carbon Steel	Soft Seat	6,000 psi	BBV4220
1/4" Male x 1/4" Female				BBV4200
1/2" Female x 1/2" Female				BBV4221
1/2" Male x 1/2" Female				BBV4201
3/4" Female x 1/2" Female				BBV4251
3/4" Male x 1/2" Female				BBV4241
1/4" Female x 1/4" Female	Stainless Steel			BBV1220
1/4" Male x 1/4" Female				BBV1200
1/2" Female x 1/2" Female				BBV1221
1/2" Male x 1/2" Female				BBV1201
3/4" Female x 1/2" Female				BBV1251
3/4" Male x 1/2" Female				BBV1241
1/4" Female x 1/4" Female	Carbon Steel	Hard Seat	10,000 psi	BBV6220
1/4" Male x 1/4" Female				BBV6200
1/2" Female x 1/2" Female				BBV6221
1/2" Male x 1/2" Female				BBV6201
3/4" Female x 1/2" Female				BBV6251
3/4" Male x 1/2" Female				BBV6241
3/4" Female x 3/4" Female				BBV6261
3/4" Male x 3/4" Female				BBV6271
1/4" Female x 1/4" Female	Stainless Steel			BBV3220
1/4" Male x 1/4" Female				BBV3200
1/2" Female x 1/2" Female				BBV3221
1/2" Male x 1/2" Female				BBV3201
3/4" Female x 1/2" Female				BBV3251
3/4" Male x 1/2" Female				BBV3241
3/4" Female x 3/4" Female				BBV3261
3/4" Male x 3/4" Female				BBV3271

Block & Bleed Two Handle NACE Order Codes

NPT Connection	Material	Seat	Max. Pressure	Code
1/4" Female x 1/4" Female	Stainless Steel NACE	Hard Seat	10,000 psi	BBV3220N
1/4" Male x 1/4" Female				BBV3200N
1/2" Female x 1/2" Female				BBV3221N
1/2" Male x 1/2" Female				BBV3201N
3/4" Female x 1/2" Female				BBV3251N
3/4" Male x 1/2" Female				BBV3241N

Replacement Plug Order Codes

Plug or Screw	Carbon Steel	Stainless Steel	Stainless Steel NACE
1/4" NPT Plug	NVAPLUG04	NVAPLUG03	NVAPLUG03N

Hard Seat Material

Description	Component Number	Carbon Steel Hard Seat	Stainless Steel Hard Seat	Stainless Steel NACE Hard Seat
Body	1	Carbon Steel	316 SS	316 SS NACE
Bonnet	2	Carbon Steel	316 SS	316 SS NACE
Dustcap	3	Nylon	Nylon	Nylon
Needle / Needle Tip	4	316 SS	316 SS	316 SS NACE
Handle	5	Carbon Steel	304 SS	304 SS
Screw	6	304 SS	304 SS	304 SS
Fastening Screw	7	304 SS	304 SS	304 SS
O-rings	8	FKM	FKM	FKM
Dwell Pin	9	304 SS	304 SS	304 SS
Vent Plug	10	Carbon Steel	316 SS	316 SS NACE

Female x Female

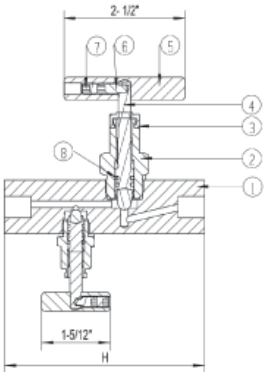

Male x Female

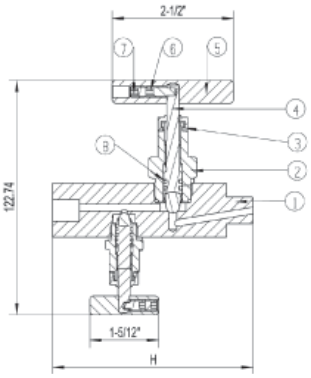

Hard Seat Dimensions

Size	H	L	SQ
1/4" Female x 1/4" Female	4.13" (105mm)	4.83" (123mm)	1.10" (28mm)
1/4" Male x 1/4" Female	4.13" (105mm)	4.83" (123mm)	1.10" (28mm)
1/2" Female x 1/2" Female	4.13" (105mm)	4.83" (123mm)	1.10" (28mm)
1/2" Male x 1/2" Female	4.13" (105mm)	4.83" (123mm)	1.10" (28mm)
3/4" Female x 1/2" Female	4.13" (105mm)	4.99" (127mm)	1.26" (32mm)
3/4" Male x 1/2" Female	4.29" (109mm)	4.83" (123mm)	1.10" (28mm)

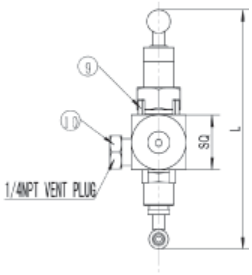

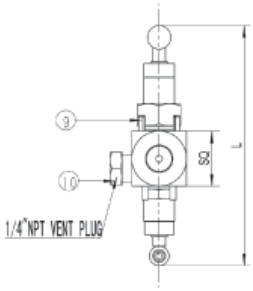

Soft Seat Material

Description	Component Number	Carbon Steel Soft Seat	Stainless Steel Soft Seat
Body	1	Carbon Steel	316 SS
Bonnet	2	Carbon Steel	316 SS
Dustcap	3	Nylon	Nylon
Needle / Needle Tip	4	316 SS	316 SS
Handle	5	Carbon Steel	304 SS
Screw	6	304 SS	304 SS
Fastening Screw	7	304 SS	304 SS
O-rings	8	FKM	FKM
Seat	9	Delrin	Delrin
Dwell Pin	10	304 SS	304 SS
Vent Plug	11	Carbon Steel	316 SS

Female x Female

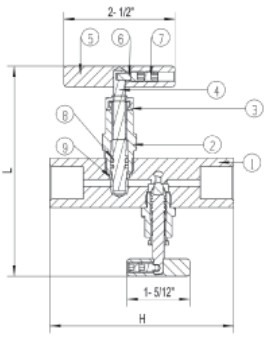

Male x Female

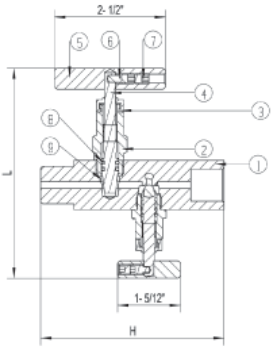

Soft Seat Dimensions

Size	H	L	SQ
1/4" Female x 1/4" Female	4.13" (105mm)	4.72" (120mm)	1.10" (28mm)
1/4" Male x 1/4" Female	4.13" (105mm)	4.72" (120mm)	1.10" (28mm)
1/2" Female x 1/2" Female	4.13" (105mm)	4.72" (120mm)	1.10" (28mm)
1/2" Male x 1/2" Female	4.13" (105mm)	4.72" (120mm)	1.10" (28mm)
3/4" Female x 1/2" Female	4.29" (109mm)	4.88" (124mm)	1.26" (32mm)
3/4" Male x 1/2" Female	4.29" (109mm)	4.68" (119mm)	1.10" (28mm)

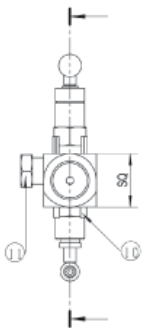

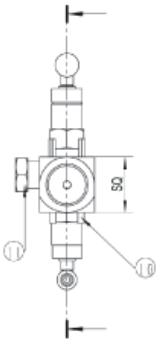

BBV Double Block & Bleed Valve

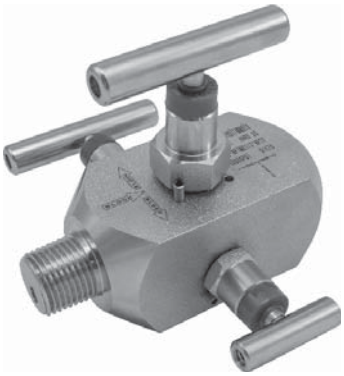

Description & Features:

- Combines isolating and venting in a single valve, eliminating the need for tubing and fittings
- Block valve isolates the downstream process fluids, and the bleed valve exhausts upstream fluids enabling instruments to be removed without disturbing the permanent piping installation on the bottom
- The 1/4" NPT vent plug is located 90° to the left and may be removed and replaced with exhaust piping to direct the fluids to a safe location
- Available in Hard Seat (10,000 psi)
- All stems are 316 stainless steel
- CRN registered
- 5 year warranty

Applications:

- Ideally suited for severe duty oil and gas installations including refineries and processing plants as well as water treatment plants, power plants and hydraulic applications where additional safety for shut-down and media venting is required

Double Block & Bleed Order Codes

NPT Connection	Material	Seat	Max. Pressure	Code
1/4" Female x 1/4" Female	Stainless Steel	Hard Seat	10,000 psi	BBV3420
1/4" Male x 1/4" Female				BBV3400
1/2" Female x 1/2" Female				BBV3421
1/2" Male x 1/2" Female				BBV3401
3/4" Female x 1/2" Female				BBV3422
3/4" Male x 1/2" Female				BBV3402

Double Block & Bleed NACE Order Codes

NPT Connection	Material	Seat	Max. Pressure	Code
1/4" Female x 1/4" Female	Stainless Steel NACE	Hard Seat	10,000 psi	BBV3420N
1/4" Male x 1/4" Female				BBV3400N
1/2" Female x 1/2" Female				BBV3421N
1/2" Male x 1/2" Female				BBV3401N
3/4" Female x 1/2" Female				BBV3422N
3/4" Male x 1/2" Female				BBV3402N

Replacement Plug Order Codes

Plug or Screw	Stainless Steel	Stainless Steel NACE
1/4" NPT Plug	NVAPLUG03	NVAPLUG03N

Material

Description	Component Number	Stainless Steel	Stainless Steel NACE
Body	1	316 SS	316 SS NACE
Bonnet	2	316 SS	316 SS NACE
Dust Cap	3	Nylon	Nylon
Needle / Needle Tip	4	316 SS	316 SS NACE
Handle	5	304 SS	304 SS
Screw	6	304 SS	304 SS
Fastening Screw	7	304 SS	304 SS
O-Rings	8	FKM	FKM
Dwell Pin	9	304 SS	304 SS
Plug	10	316 SS	316 SS NACE

Dimensions

Size	H	L	SQ	SQ1	M	N	P
1/4” Female x 1/4” Female	3.70” (94mm)	3.72” (95mm)	1.57” (40mm)	1.75” (44.5mm)	5.50” (140mm)	2.15” (55mm)	1.62” (41mm)
1/4” Male x 1/4” Female	4.00” (102mm)	3.72” (95mm)	1.57” (40mm)	1.75” (44.5mm)	6.10” (155mm)	2.15” (55mm)	1.60” (41mm)
1/2” Female x 1/2” Female	3.70” (94mm)	3.72” (95mm)	1.57” (40mm)	1.75” (44.5mm)	5.50” (140mm)	2.15” (55mm)	1.62” (41mm)
1/2” Male x 1/2” Female	4.00” (102mm)	3.72” (95mm)	1.57” (40mm)	1.75” (44.5mm)	6.10” (155mm)	2.15” (55mm)	1.60” (41mm)
3/4” Female x 1/2” Female	3.70 (94mm)	3.72” (95mm)	1.57” (40mm)	1.75” (44.5mm)	5.50” (140mm)	2.15” (55mm)	1.62” (41mm)
3/4” Male x 1/2” Female	4.00” (102mm)	3.72” (95mm)	1.57” (40mm)	1.75” (44.5mm)	6.10” (155mm)	2.15” (55mm)	1.60” (41mm)

Female x Female

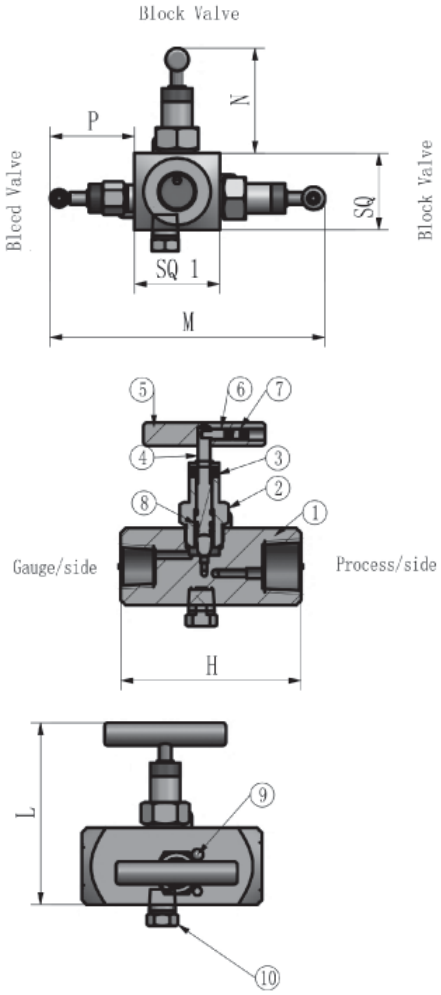

Male x Female

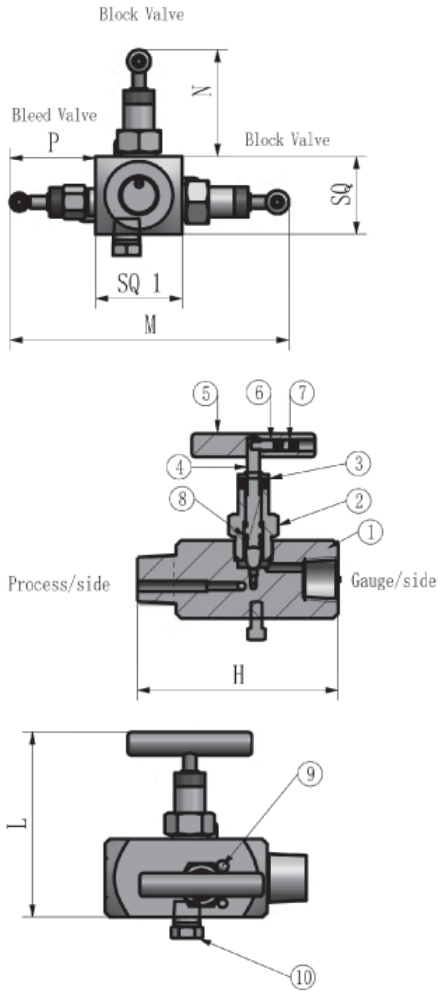

SMV, SMV-LF

Mini Ball Valve, Lead Free Mini Ball Valve

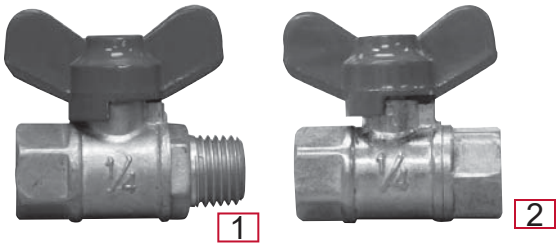

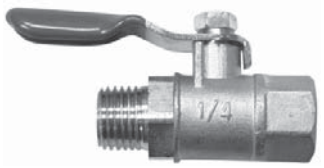

1. T-Handle Mini Ball Valve (FxM)
2. T-Handle Mini Ball Valve (FxF)
3. Lever Handle Mini Ball Valve (MXF)

LEAD FREE

Description & Features:

- An economical isolation valve for pressure gauges and transmitters
- Brass or lead free brass wetted parts
- ASME B1.20.1 compliant
- CRN registered
- 5 year warranty

Applications:

- Provides flow control for non-corrosive applications
- Lead free version for potable water systems

Specifications	
Body	SMV: #59-1 forged brass SMV-LF: Lead free forged brass
Ball	SS
Gaskets	PTFE
Handle	Steel, plated, plastic covered
Process Temperature	-9°F to 212°F (-23°C to 100°C)
Maximum Operating Pressure	400 psi (2,758 kPa)
Connection	1/4" NPTF x 1/4" NPTM 1/4" NPTF x 1/4" NPTF
Warning	⚠ **WARNING:** This product can expose you to chemicals including lead, which is known to the State of California to cause cancer and birth defects or other reproductive harm. For more information go to www.P65Warnings.ca.gov.

SMV Order Codes (products in bold are normally stock in North America)

Connection	T-Handle	Lever Handle
F x M	SMV532	SMV500
F x F	SMV533	-

SMV-LF Order Codes (products in bold are normally stock in North America)

Connection	T-Handle	Lever Handle
F x M	SMV532LF	SMV500LF
F x F	SMV533LF	-

Other sizes and materials available upon request.

T-Handle Mini Ball Valve (M x F)

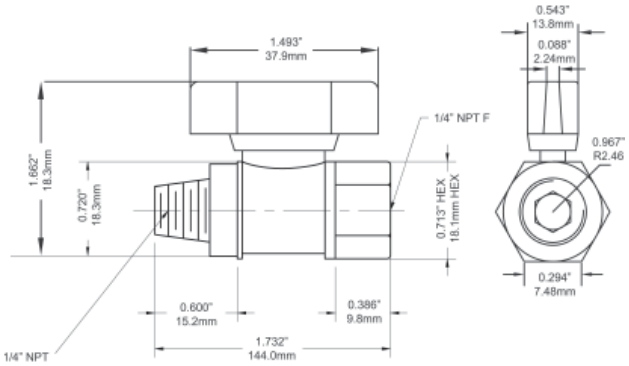

T-Handle Mini Ball Valve (F x F)

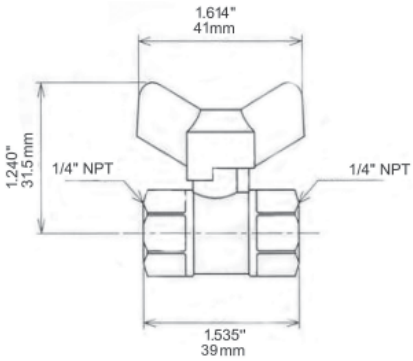

Lever Handle Mini Ball Valve (M x F)

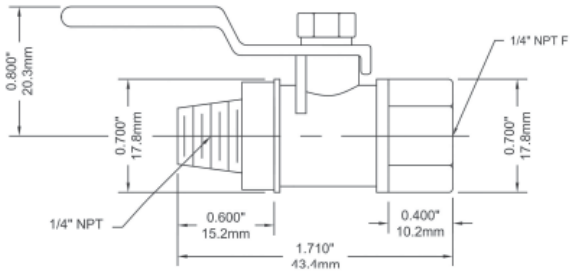

Description & Features:

- An isolation valve for pressure gauges and transmitters
- For mild applications, this valve can be used to throttle pulsation. Please see NVA Stainless Steel Needle Valve for more demanding applications
- Brass or lead free brass wetted parts
- ASME B1.20.1 compliant
- CRN registered
- 5 year warranty

Applications:

- Provides precision flow control for any non-corrosive application up to 400 psi (2,758 kPa)
- Lead free version for potable water systems

Specifications	
Body	SNV: #59-1 forged brass SNV-LF: Lead free forged brass
Handle	ABS plastic, dyed red
O-ring	Rubber
Shaft	SNV: #59-1 brass SNV-LF: Lead free brass
Nut	SNV: #59-1 brass SNV-LF: Lead free brass
Ambient/Process Temperature	-9°F to 212°F (-23°C to 100°C)
Maximum Operating Pressure	400 psi (2,758 kPa)
Connection	1/4" NPTF
Warning	**WARNING:** This product can expose you to chemicals including lead, which is known to the State of California to cause cancer and birth defects or other reproductive harm. For more information go to www.P65Warnings.ca.gov.

SNV Order Codes (products in bold are normally stock in North America)

Code
SNV510

SNV-LF Order Codes (products in bold are normally stock in North America)

Code
SNV510LF

Other sizes and materials available upon request.

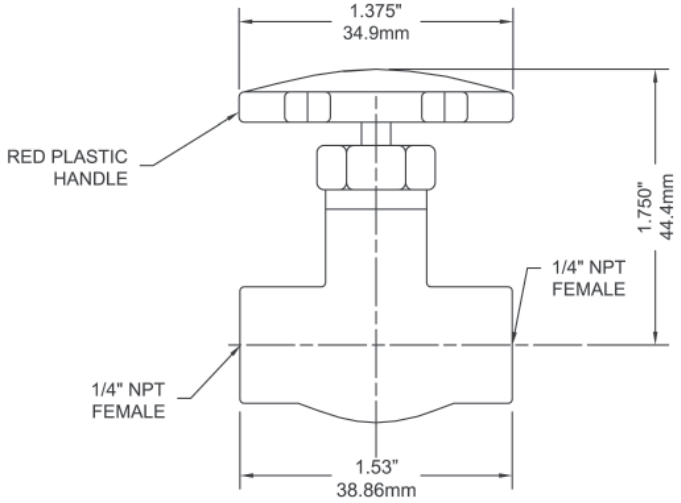

	Series	Dial Size								Scale Size					Case Material					Wetted Parts		Connec-tion Size			Accuracy						
Catalogue Page		≤2"	2.5"	3"	3.5"	4"	4.5"	5"	≥6"	4.5"	5"	6"	8"	9"	Steel	SS	Aluminum	Valox®*	Plastic	Brass	SS	1/4" NPT	1/2" NPT	3/4" NPT	1% (Grade A)	2% (Grade B)	2.5% (Grade B)	3% (Grade B)	With thermowell	RoHS compliant	Lead Free Option
195	TAG HVAC Gold Case Thermometer									x		x					x			x	x		x			x			x		
197	TAS/TAS-LF Industrial/Lead Free Industrial 5" Thermometer										x								x	x			x			x			x	x	x
199	TBM Bi-Metal Thermometer	x		x		x		x	x							x					x	x	x		x					x	
204	TBT HVAC Bi-Metal Thermometer				x										x					x			x			x					
205	TCT Clamp-On Thermometer		x												x													x			
206	THR HVAC Remote Reading Thermometer	x	x													x				x							x				
208	THS Solar Digital Bi-Metal Thermometer			x												x					x		x		x					x	
209	TIM/TIM-LF Industrial/Lead Free Industrial 9" Thermometer													x			x	x		x				x	x				x	x	x
211	TMT Surface Magnet Thermometer	x													x											x					
212	TNR Food & Beverage Bi-Metal Thermometer			x												x					x		x		x					x	
213	TRR Gas or Vapour Remote Reading Thermometer		x		x	x	x		x						x	x	x			x	x		x	x	x	x				x	
219	TSD Industrial Solar Digital									x									x	x				x	x				x	x	
221	TSW/TSW-LF Hot Water/Lead Free Hot Water Thermometer	x	x										x		x		x			x			x		x				x		x
223	TTD Tridicator		x	x											x					x		x	x					x			

Valox® is a registered trademark of the General Electric Company

Note: When selecting a thermometer, always refer to ASME B40.200 (2008)

Description & Features:

- Available in 4.5” (115mm) or 6” (150mm) scales
- Brass socket 1/2” NPT is standard (stainless steel optional)
- Available in either a straight model (bottom connection) or 90° angle model (back connection)
- ASME B40.200 and ASTM E2251 compliant
- 5 year warranty

Applications:

- Heating, plumbing, air conditioning and ventilation applications

Specifications	
Scale	Aluminum, black markings
Case	4.5” (115 mm), 6” (150 mm) aluminum, anodized gold
Tube	Glass, cushioned
Liquid Filling	Organic liquid (red)
Stem	Brass (SS optional)
Connection	1/2” NPT (1/2” BSP optional)
Swivel Nut	Brass (SS optional; swivel and stem one unit)
Ambient/Process Temperature	-40°F to 400°F (-40°C to 204°C)
Operating Temperature	Maximum 80% of full scale value recommended
Accuracy	±2% of full scale
Enclosure Rating	IP65
Warning	⚠ **WARNING:** This product can expose you to chemicals including lead, which is known to the State of California to cause cancer and birth defects or other reproductive harm. For more information go to www.P65Warnings.ca.gov.

Order Codes

	Straight		Angle	
Range	**4.5” (110mm)**	**6” (150mm)**	**4.5” (110mm)**	**6” (150mm)**
-40°F to 110°F & -40°C to 40°C	TAG130AG4	TAG130AG6	TAG140AG4	TAG140AG6
20°F to 180°F & -5°C to 80°C	TAG131AG4	TAG131AG6	TAG141AG4	TAG141AG6
30°F to 240°F & 0°C to 115°C	TAG132AG4	TAG132AG6	TAG150AG4	TAG150AG6
30°F to 300°F & 0°C to 150°C	TAG134AG4	TAG134AG6	TAG143AG4	TAG143AG6
50°F to 400°F & 10°C to 210°C	TAG133AG4	TAG133AG6	TAG142AG4	TAG142AG6

Other ranges and connection sizes available upon request. 304 SS thermowell available upon request.

Angle

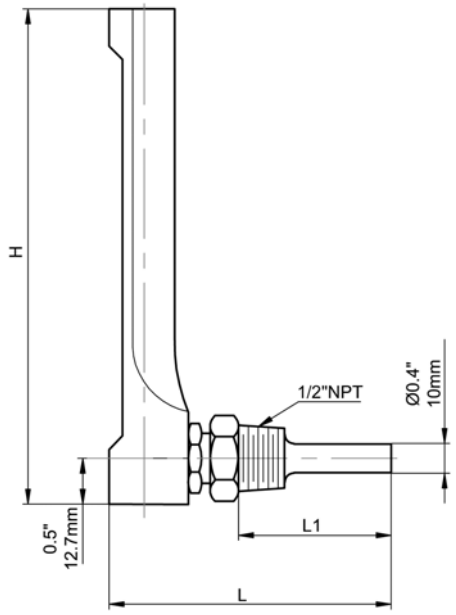

Straight

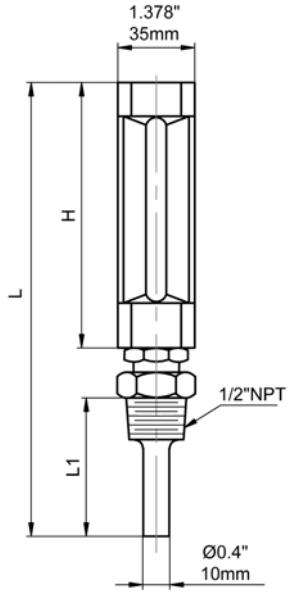

Dimensions

Case Height (H)	Stem Length (L1)	L (Angle)	L (Straight)
4.5” (114mm)	2” (50.8mm)	3.69” (93.7mm)	7.17” (182.1mm)
6” (152.4mm)			8.67” (220.2mm)

Description & Features:

- An all-purpose, economical thermometer with a vertical sensing tube and case
- Separable brass, lead free brass or stainless steel thermowell
- Impact resistant ABS case
- Red liquid-in glass
- Dual scale (°F & °C)
- Straight or angle connection
- 1/2” NPT process connection
- ASME B40.200 and ASTM E2251 compliant
- 5 year warranty

Applications:

- Hot water lines, boilers, heating, ventilation and air conditioning
- Lead free version for potable water systems

LEAD FREE

RoHS compliant

Note: RoHS applies only to SS thermowell

Specifications	
Scale	Aluminum, painted white with black markings
Case	5” (127mm) black ABS
Lens	Glass
Tube	Glass, cushioned
Sensing Liquid	Kerosene, tinted red
Stem	Brass
Thermowell	TAS: Brass 1/2” NPT standard, (3/4” and SS optional) TAS-LF: Lead free brass 1/2” NPT (3/4” optional)
Operating Pressure	Maximum 710 psi (4,895 kPa)
Ambient Temperature	-40°F to 122°F (-40°C to 50°C)
Process Temperature	-40°F to 400°F (-40°C to 204°C)
Accuracy	±2% of full scale
Enclosure Rating	IP50
Warning	**WARNING:** This product can expose you to chemicals including lead, which is known to the State of California to cause cancer and birth defects or other reproductive harm. For more information go to www.P65Warnings.ca.gov.

Industrial 5” Thermometer, Lead Free Industrial 5” Thermometer

TAS Order Codes (products in bold are normally stock in North America)

Range	Straight	Angle
-40°F to 110°F & -40°C to 40°C	TAS130	TAS140
20°F to 180°F & -5°C to 80°C	TAS131	TAS141
30°F to 240°F & 0°C to 115°C	TAS132	TAS150
30°F to 300°F & 0°C to 150°C	TAS134	TAS143
50°F to 400°F & 10°C to 200°C	TAS133	TAS142

Thermowell

Connection	Material	Code
1/2“ NPT - Standard (Included with thermometer)	Brass	TAS62
1/2“ NPT - Optional	304 SS	TAS62-1
3/4“ NPT - Optional	Brass	TAS64
3/4“ NPT - Optional	304 SS	TAS64-1

TAS-LF Order Codes (products in bold are normally stock in North America)

Range	Straight	Angle
-40°F to 110°F & -40°C to 40°C	TAS130LF	TAS140LF
20°F to 180°F & -5°C to 80°C	TAS131LF	TAS141LF
30°F to 240°F & 0°C to 115°C	TAS132LF	TAS150LF
30°F to 300°F & 0°C to 150°C	TAS134LF	TAS143LF
50°F to 400°F & 10°C to 200°C	TAS133LF	TAS142LF

Thermowell (products in bold are normally stock in North America)

Connection	Material	Code
1/2“ NPT - Standard (Included with thermometer)	Brass	TAS62LF
3/4“ NPT - Optional	Brass	TAS64LF

Other ranges and connection sizes available upon request. 304 SS thermowell available upon request. Plastic lens available upon request. 3/4” NPT connection available upon request.

Straight

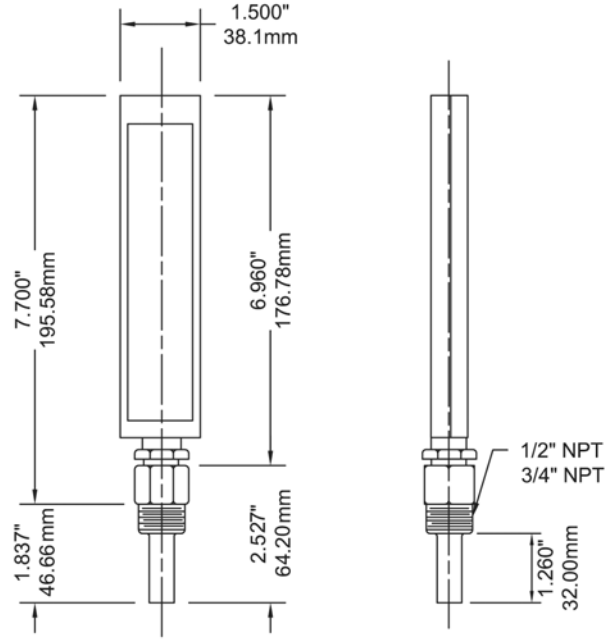

Angle

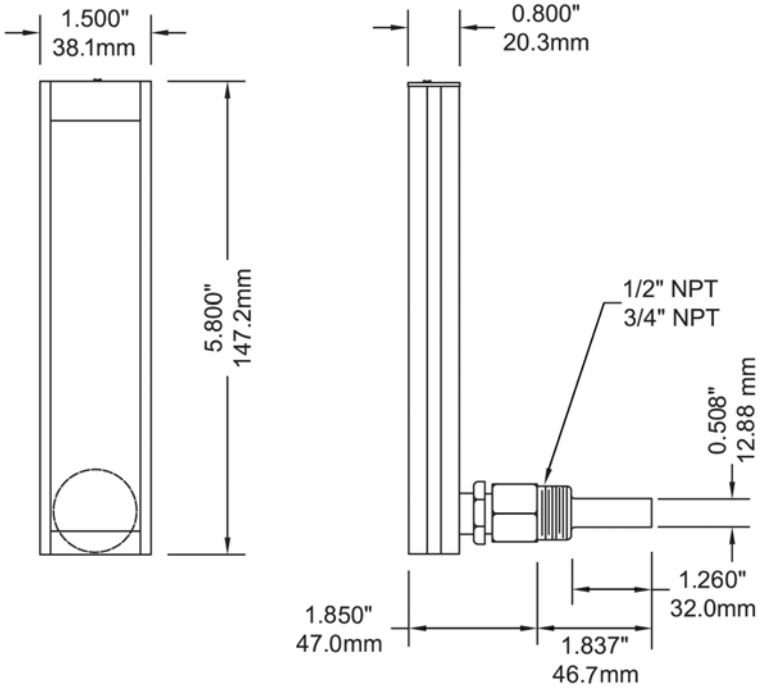

Description & Features:

- A general purpose, versatile 1” (25mm) to 6” (150mm) dial, 304 stainless steel thermometer
- Bi-metallic sensing element for reliable readings
- Back, bottom or adjustable angle connection
- Welded stem length from 2.5” (63mm) and up
- ±1% accuracy
- Anti-parallax dial that reduces operator reading errors (3” (75mm)-6” (150mm))
- Recalibrator screw is standard on all dial sizes
- Use with TBR or TWF thermowells
- ASME B40.200 compliant
- 5 year warranty

Applications:

- Industrial process, heating and air conditioning, ventilation and waste water
- Commercial installations such as barbecues, home brewing systems and cooking devices

Specifications	
Dial	1” (25mm), 2” (50mm): Aluminum with black markings, flat dial 3” (75mm), 4” (100mm), 5” (127mm), 6” (150mm): Aluminum with black markings, anti-parallax dial
Case	AISI 304 SS
Stem	AISI 304 SS welded to socket, centre back, bottom or adjustable angle configurations (316 SS optional*) 1” (25mm), 2” (50mm) dial: Centre back connection only
Recalibrator Screw	Standard
Lens	1” (25mm): Polycarbonate Others: Glass standard, hermetically sealed
Ring	AISI 304 SS
Connection	1” (25mm): None 2” (50mm): 1/4” NPT standard 3” (75mm), 4” (100mm), 5” (127mm), 6” (150mm): 1/2” NPT standard
Sensing Element	Bi-metallic coil
Pointer	Aluminum, painted black
Maximum Operating Pressure	125 psi (861 kPa)
Operating Temperature	75% of full scale value (recommended maximum)
Ambient Temperature	-58°F to 248°F (-50°C to 120°C)
Accuracy	±1% of full scale
Enclosure Rating	2” (50mm) to 6” (150mm): IP68

*Contact Winters for 316 SS requirements
Note: The use of a thermowell is recommended to protect the thermometer in corrosive or pressure applications, as well as to maintain a closed system during its removal from the process

Order Codes (products in bold are normally stock in North America)

1” (25mm) Dial, Fixed Centre Back	
Temperature Range	5” Stem Length Code
-40°F to 160°F	TBM10050B15
0°F to 250°F	TBM10050B19
50°F to 500°F&C	TBM10050B11

2” (50mm) Dial, Fixed Centre Back		
Temperature Range	2.5” Stem Length Code	4” Stem Length Code
-40°F to 120°F&C	TBM20025B2	-
0°F to 200°F&C	TBM20025B6	-
0°F to 240°F&C	-	TBM20040B7
0°F to 250°F&C	TBM20025B8	TBM20040B8
50°F to 300°F&C	TBM20025B9	-
50°F to 400°F&C	TBM20025B10	-
50°F to 500°F&C	TBM20025B11	-

3” (75mm) Dial, Fixed Centre Back				
Temperature Range	2.5” Stem Length Code	4” Stem Length Code	6” Stem Length Code	9” Stem Length Code
-40°F to 120°F&C	TBM30025B2	-	TBM30060B2	-
0°F to 140°F&C	TBM30025B3	-	-	-
-40°F to 160°F&C	TBM30025B4	-	-	-
0°F to 200°F&C	TBM30025B6	TBM30040B6	TBM30060B6	-
20°F to 240°F&C	TBM30025B7	TBM30040B7	TBM30060B7	-
0°F to 250°F	TBM30025B19	TBM30040B19	-	-
0°F to 250°F&C	TBM30025B8	TBM30040B8	TBM30060B8	TBM30090B8
50°F to 300°F&C	TBM30025B9	TBM30040B9	TBM30060B9	TBM30090B9
50°F to 400°F&C	TBM30025B10	TBM30040B10	TBM30060B10	-
50°F to 500°F&C	TBM30025B11	TBM30040B11	TBM30060B11	TBM30090B11
150°F to 750°F&C	-	-	TBM30060B12	TBM30090B12
200°F to 1,000°F&C	-	-	TBM30060B13	-

3” (75mm) Dial, Bottom		
Temperature Range	2.5” Stem Length Code	4” Stem Length Code
0°F to 200°F	TBM31025B17	-
0°F to 200°F&C	TBM31025B6	-
0°F to 250°F&C	TBM31025B8	-
20°F to 240°F&C	TBM31025B7	TBM31040B7
50°F to 500°F&C	-	TBM31040B11

3” (75mm) Dial, Adjustable Angle		
Temperature Range	2.5” Stem Length Code	4” Stem Length Code
0°F to 200°F&C	TBM32025B6	TBM32040B6
0°F to 250°F&C	TBM32025B8	TBM32040B8
50°F to 300°F&C	TBM32025B9	-

5” (127mm) Dial, Fixed Centre Back				
Temperature Range	2.5” Stem Length Code	4” Stem Length Code	6” Stem Length Code	9” Stem Length Code
-40°F to 120°F&C	TBM50025B2	-	TBM50060B2	TBM50090B2
0°F to 140°F&C	TBM50025B3	-	-	-
20°F to 240°F&C	TBM50025B7	-	-	-
0°F to 250°F&C	TBM50025B8	TBM50040B8	-	-
50°F to 300°F&C	TBM50025B9	TBM50040B9	TBM50060B9	-
50°F to 500°F&C	TBM50025B11	-	TBM50060B11	-
150°F to 750°F&C	-	TBM50040B12	TBM50060B12	-

5” (127mm) Dial, Adjustable Angle				
Temperature Range	2.5” Stem Length Code	4” Stem Length Code	6” Stem Length Code	9” Stem Length Code
0°F to 140°F&C	TBM52025B3	TBM52040B3	TBM52060B3	-
-40°F to 160°F&C	-	-	TBM52060B4	-
0°F to 200°F&C	-	TBM52040B6	-	-
20°F to 240°F&C	TBM52025B7	-	-	-
0°F to 250°F&C	TBM52025B8	TBM52040B8	TBM52060B8	TBM52090B8
50°F to 300°F&C	-	TBM52040B9	-	-

Order Codes: To order, specify the code for each dial/stem length and the range: i.e. TBM20025 - B26

Dial Size	Stem Length	Fixed Centre Back	Bottom	Adjustable Angle
1" (25mm) pocket thermometer	5" (127mm)	TBM10050	-	-
2" (50mm) lab thermometer	8" (200mm)	TBM20080	-	-
2" (50mm)	2.5" (63mm)	TBM20025	-	-
	4" (100mm)	TBM20040	-	-
	6" (150mm)	TBM20060	-	-
	9" (230mm)	TBM20090	-	-
	12" (300mm)	TBM20120	-	-
	15" (370mm)	TBM20150	-	-
3" (75mm)	2.5" (63mm)	TBM30025	TBM31025	TBM32025
	4" (100mm)	TBM30040	TBM31040	TBM32040
	6" (150mm)	TBM30060	TBM31060	TBM32060
	9" (230mm)	TBM30090	TBM31090	TBM32090
	12" (300mm)	TBM30120	TBM31120	TBM32120
	15" (370mm)	TBM30150	TBM31150	TBM32150
4" (100mm)	2.5" (63mm)	TBM40025	TBM41025	TBM42025
	4" (100mm)	TBM40040	TBM41040	TBM42040
	6" (150mm)	TBM40060	TBM41060	TBM42060
	9" (230mm)	TBM40090	TBM41090	TBM42090
	12" (300mm)	TBM40120	TBM41120	TBM42120
	15" (370mm)	TBM40150	TBM41150	TBM42150
5" (127mm)	2.5" (63mm)	TBM50025	TBM51025	TBM52025
	4" (100mm)	TBM50040	TBM51040	TBM52040
	6" (150mm)	TBM50060	TBM51060	TBM52060
	9" (230mm)	TBM50090	TBM51090	TBM52090
	12" (300mm)	TBM50120	TBM51120	TBM52120
	15" (370mm)	TBM50150	TBM51150	TBM52150
6" (150mm)	2.5" (63mm)	TBM60025	TBM61025	TBM62025
	4" (100mm)	TBM60040	TBM61040	TBM62040
	6" (150mm)	TBM60060	TBM61060	TBM62060
	9" (230mm)	TBM60090	TBM61090	TBM62090
	12" (300mm)	TBM60120	TBM61120	TBM62120
	15" (370mm)	TBM60150	TBM61150	TBM62150

°F & °C (Dual)	Code	°F only	Code	°C only	Code	°C & °F (Dual)	Code
-100°F to 150°F & -70°C to 70°C	B1	-40°F to 120°F	B14	-80°C to 50°C	B26	-30°C to 70°C & -20°F to 150°F	B75
-40°F to 120°F & -40°C to 50°C	B2	-40°F to 160°F	B15	-50°C to 50°C	B27	0°C to 120°C & 30°F to 250°F	B76
0°F to 140°F & -20°C to 60°C	B3	0°F to 140°F	B16	0°C to 50°C	B28	0°C to 300°C & 30°F to 570°F	B77
-40°F to 160°F & -40°C to 70°C	B4	0°F to 200°F	B17	-50°C to 100°C	B29	0°C to 200°C & 30°F to 400°F	B79
25°F to 125°F & - 5°C to 50°C	B5	20°F to 240°F	B18	0°C to 100°C	B30	0°C to 250°C & 30°F to 480°F	B80
0°F to 200°F & -20°C to 90°C	B6	0°F to 250°F	B19	-20°C to 120°C	B31	0°C to 50°C & 30°F to 120°F	B81
20°F to 240°F & - 5°C to 115°C	B7	50°F to 300°F	B20	0°C to 150°C	B32	-20°C to 60°C & -4°F to 140°F	B85
0°F to 250°F & -20°C to 120°C	B8	50°F to 400°F	B21	0°C to 200°C	B33	-	-
50°F to 300°F & 10°C to 150°C	B9	50°F to 550°F	B22	0°C to 300°C	B34	-	-
50°F to 400°F & 10°C to 200°C	B10	150°F to 750°F	B23	0°C to 450°C	B35	-	-
50°F to 500°F & 10°C to 260°C	B11	0°F to 800°F	B24	100°C to 550°C	B36	-	-
150°F to 750°F & 70°C to 400°C	B12	200°F to 1,000°F	B25	0°C to 500°C	B39	-	-
200°F to 1,000°F & 100°C to 550°C	B13	14°F to 140°F	B38	-10°C to 60°C	B40	-	-
14°F to 140°F & -10°C to 60°C	B37	-	-	100°C to 400°C	B41	-	-
32°F to 212°F & 0°C to 100°C	B52	-	-	100°C to 540°C	B42	-	-
32°F to 140°F & 0°C to 60°C	B84	-	-	-30°C to 70°C	B45	-	-
-60°F to 300°F & -50°C to 150°C	B86	-	-	20°C to 120°C	B46	-	-
-	-	-	-	-30°C to 170°C	B47	-	-
-	-	-	-	0°C to 120°C	B48	-	-
-	-	-	-	0°C to 400°C	B49	-	-
-	-	-	-	0°C to 250°C	B50	-	-
-	-	-	-	20°C to 60°C	B51	-	-
-	-	-	-	0°C to 60°C	B82	-	-

Other ranges, stem lengths and connection sizes available upon request. For glycerin fill, maximum temperature limit is 300°F (150°C). Silicone fill available.

Option suffix for above order code only:

AP3 = 3" (75mm) acrylic lens
AP4 = 4" (100mm) acrylic lens
AP5 = 5" (127mm) acrylic lens
AP6 = 6" (150mm) acrylic lens
BG3 = 3" (75mm) glycerin filling
BG4 = 4" (100mm) glycerin filling
BG5 = 5" (127mm) glycerin filling
BG6 = 6" (150mm) glycerin filling
DUCT = Aluminum duct flange
RSP4 = 4" (100mm) Red set pointer
RSP5 = 5" (127mm) Red set pointer
RSP6 = 6" (150mm) Red set pointer
SCK = Socket conversion kit
SPG3 = 3" (75mm) Shatterproof glass lens
SPG4 = 4" (100mm) Shatterproof glass lens
SPG5 = 5" (127mm) Shatterproof glass lens
SPG6= 6" (150mm) Shatterproof glass lens

Note: The use of a thermowell is recommended to protect the thermometer from corrosive or damaging environments, as well as to maintain a closed system during its removal from the process

1” Back Connection

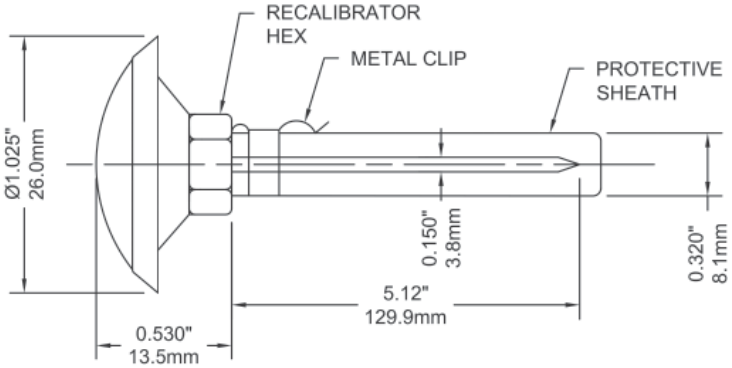

2” Back Connection

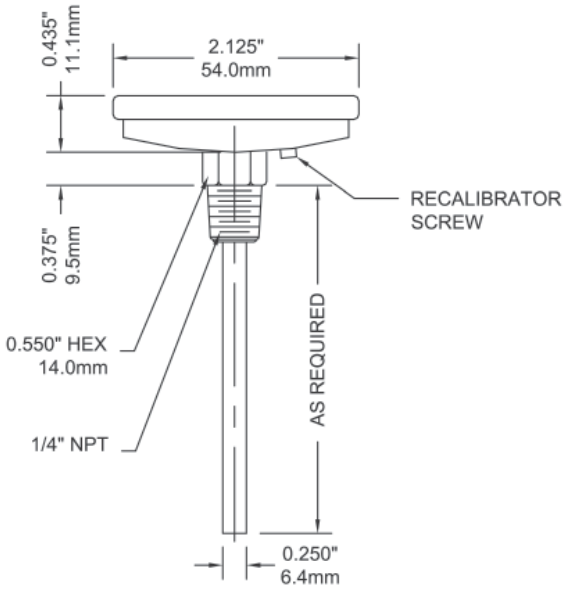

3” Adjustable Angle Connection

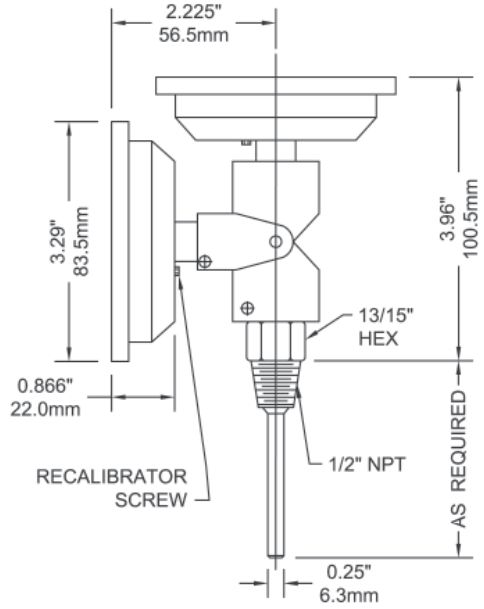

4” Back Connection

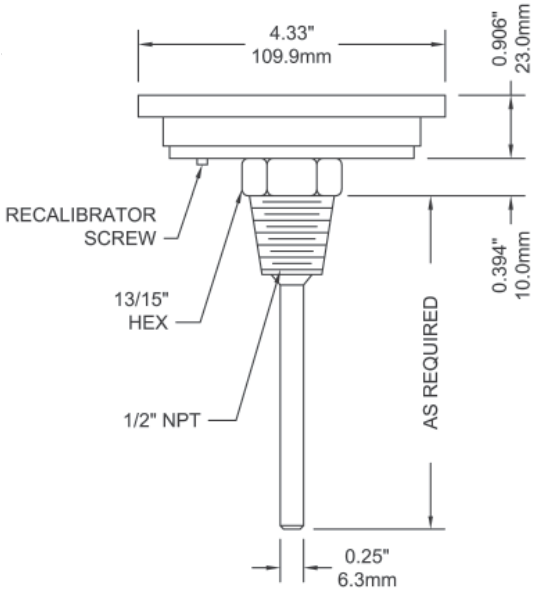

5” Bottom Connection

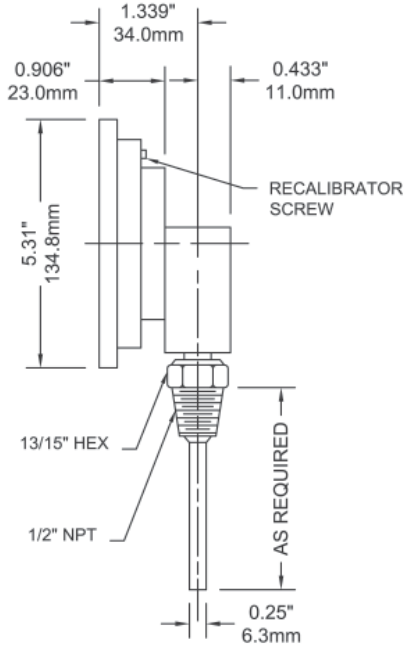

5” Adjustable Angle Connection

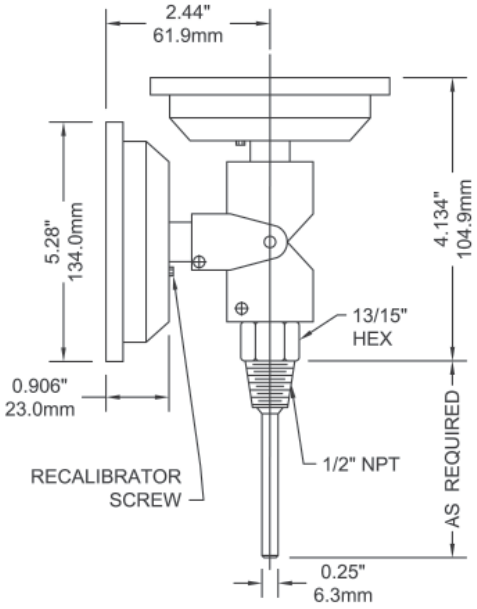

6” Back Connection

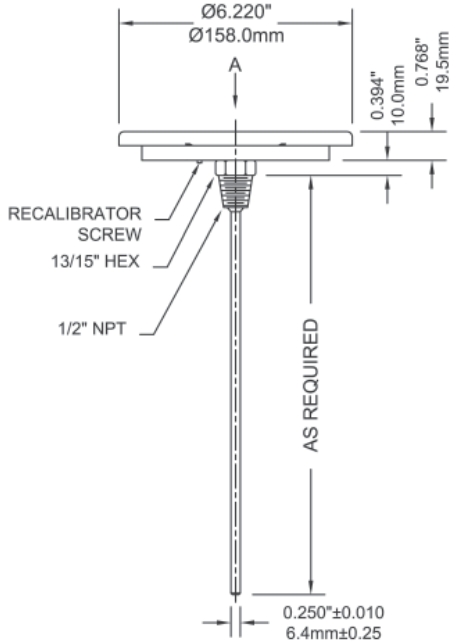

6” Bottom Connection

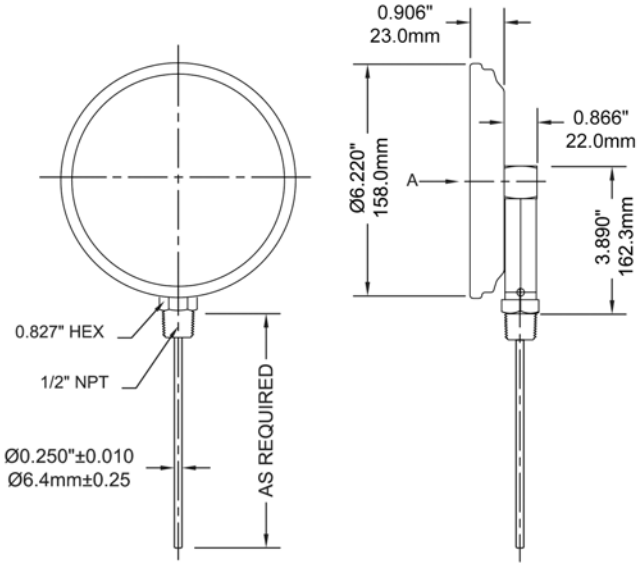

TBT HVAC Bi-Metal Thermometer

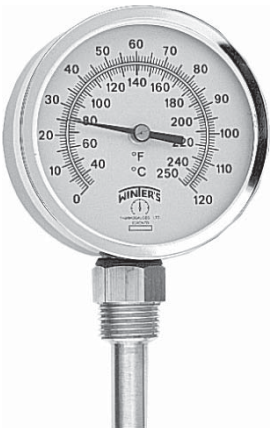

Description & Features:

- A durable and accurate thermometer with a rigid connection
- Separable thermowell
- Rugged steel case
- Bi-metallic element
- Dual scale (°F & °C)
- Back or bottom connected
- 1/2" NPT process connection
- ASME B40.200 compliant
- 5 year warranty

Applications:

- Hot water lines, boilers and hydronic heating

Specifications	
Dial	3.5" (90mm), aluminum with black markings
Case	Steel
Lens	Glass
Ring	Steel, chrome plated
Stem	Brass
Thermowell	Brass, 1/2" NPT (standard), separable
Sensing Element	Bi-metallic coil
Pointer	Aluminum, painted black
Over Range Enclosure Rating	±25% of full scale value
Reset	Standard
Ambient Temperature	-22°F to 158°F (-30°C to 70°C)
Process Temperature	-22°F to 250°F (-30°C to 120°C)
Accuracy	±2% of full scale
Enclosure Rating	IP50
Warning	**WARNING:** This product can expose you to chemicals including lead, which is known to the State of California to cause cancer and birth defects or other reproductive harm. For more information go to www.P65Warnings.ca.gov.

Order Codes (products in bold are normally stock in North America)

Range	Bottom	Back
30°F to 250°F & 0°C to 121°C	TBT165	TBT160
0°F to 120°F	-	TBT161

Other ranges and connection sizes available upon request.

Bottom Connection

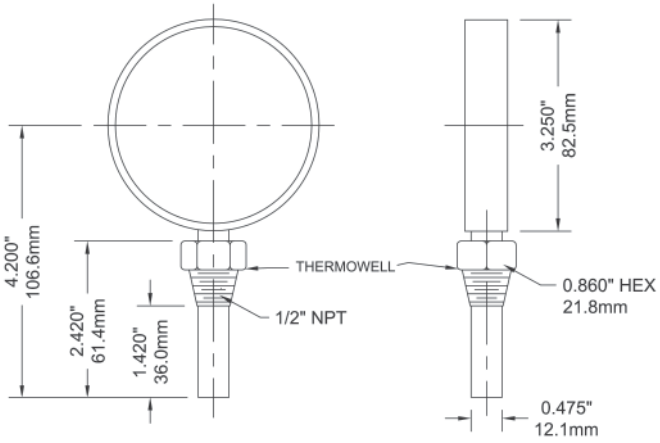

Description & Features:

- Provides an economical and accurate method to measure surface temperatures on a 1/2” (12.5mm) to 4” (100mm) pipe
- Clamp-on design with steel spring
- Dual scale (°F & °C)
- 3 ranges available
- Easy to install
- ASME B40.200 compliant
- 5 year warranty

Applications:

- To measure surface temperature on pipe in the heating, ventilation, air conditioning, wastewater, industrial process markets

Specifications	
Dial	2.5” (63mm) aluminum with black markings
Case	Mild steel
Lens	Plexiglass
Ring	Steel, chrome plated
Sensing Element	Bi-metallic coil
Pointer	Aluminum, painted black
Over-Range Enclosure Rating	25% of full scale value
Ambient/Process Temperature	-40°F to 390°F (-40°C to 200°C)
Accuracy	±3% of full scale
Enclosure Rating	IP52

Order Codes (products in bold are normally stock in North America)

Range	Code
-40°F to 110°F & -40°C to 40°C	TCT166
30°F to 250°F & 0°C to 120°C	TCT167
30°F to 390°F & 0°C to 200°C	TCT168

Other ranges and connection sizes available upon request.

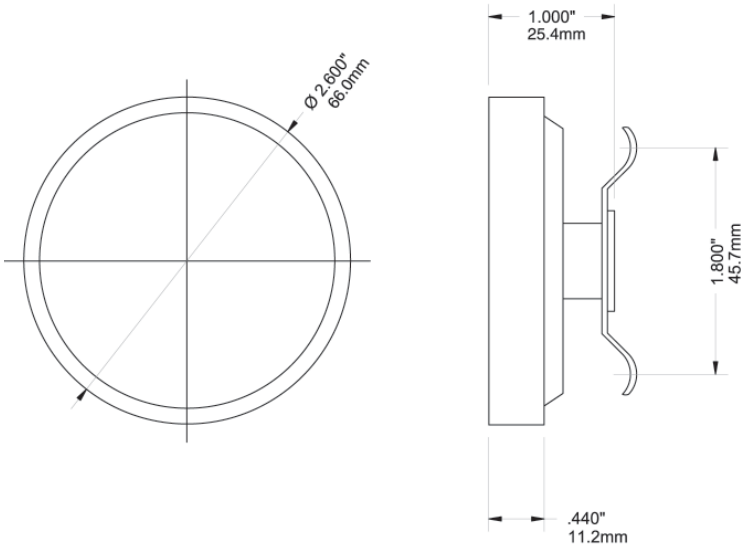

THR HVAC Remote Reading Thermometer

Description & Features:

- An economical thermometer for remote reading applications
- Stainless steel case
- Vapour actuated
- Panel mounted (Front Flange or U-Clamp)
- Dual scale (°F & °C)
- 9' capillary length
- ASME B40.200 compliant
- 5 year warranty

Applications:

- Freezers, walk-in refrigeration units, food storage cabinets, heating and ventilation
- Widely specified in the HVAC, commercial and mechanical industry segments

Specifications	
Dial	Aluminum, painted white with black markings
Case	SS front flange, SS U-Clamp case
Lens	Plexiglass
Bourdon Tube	Phosphor bronze
Movement	Brass
Pointer	Aluminum, painted black
Welding	Silver alloy
Capillary	9' (3m) nickel plated brass
Protective Spring	SS
Bulb	Nickel plated brass
Operating Temperature	Recommended maximum 75% of full scale value
Accuracy	±2.5% of full scale
Enclosure Rating	IP52
Warning	⚠ **WARNING:** This product can expose you to chemicals including lead, which is known to the State of California to cause cancer and birth defects or other reproductive harm. For more information go to www.P65Warnings.ca.gov.

Order Codes

Dial Size	Panel Cut-out	Case Style	Range	Code
2" (50mm)	2.05" (52mm)	Front Flange	-40°F to 60°F & -40°C to 15°C	THR2214090R4
2" (50mm)			-20°F to 120°F & -30°C to 50°C	THR2214090R5
2" (50mm)		U-Clamp	-40°F to 60°F & -40°C to 15°C	THR2514090R4
2" (50mm)			-20°F to 120°F & -30°C to 50°C	THR2514090R5
2.5" (63mm)	2.55" (64mm)	Front Flange	-40°F to 60°F & -40°C to 15°C	THR3214090R4
2.5" (63mm)			-20°F to 120°F & -30°C to 50°C	THR3214090R5
2.5" (63mm)		U-Clamp	-40°F to 60°F & -40°C to 15°C	THR3514090R4
2.5" (63mm)			-20°F to 120°F & -30°C to 50°C	THR3514090R5

Other ranges and connection sizes available upon request.

2” with U-Clamp

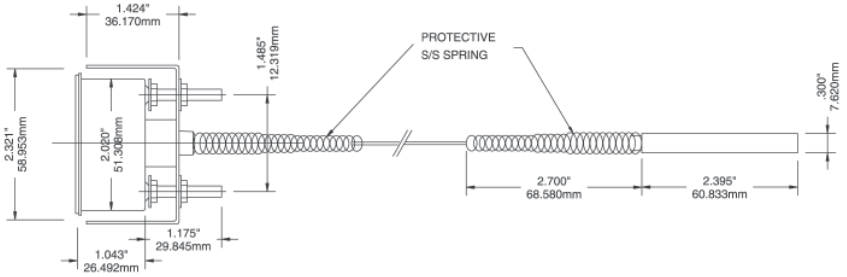

2” with Front Flange

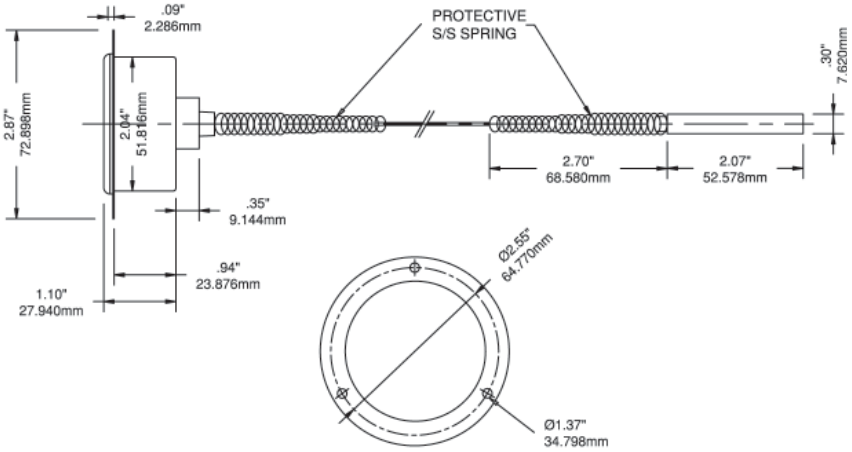

2.5” with U-Clamp

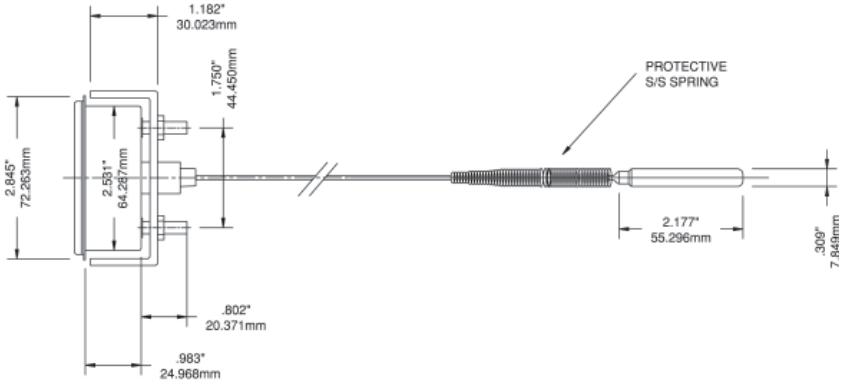

2.5” with Front Flange

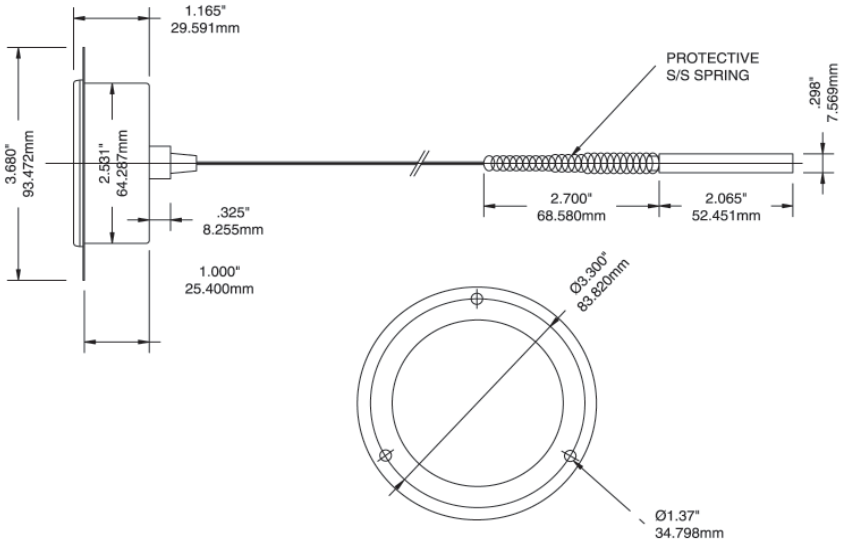

THS Solar Digital Bi-Metal Thermometer

Description & Features:

- A solar powered digital thermometer that provides a local temperature reading to 1/10 of a degree
- 304 stainless steel case, stem and socket
- Hermetically sealed thermometer case
- Minimum required light 35 Lux
- Ceramic resistance sensing element
- 1/2” adjustable angle connection
- 4” (100mm), 6” (150mm) and 9” (230mm) stem lengths
- °F or °C scales available
- ASME B40.200 compliant
- 5 year warranty

Applications:

- Temperature sensing for heating, ventilation, air conditioning, waste water, industrial processes or compressors

Specifications	
Dial	3” (75mm)
Case	304 SS
Lens	Glass (3mm thickness)
Ring	304 SS, bezel, hermetically sealed
Display	LCD
Stem	304 SS, 0.25” (6mm) diameter with lengths 2.5” (63mm) to 24” (600mm)
Connection	1/2” NPT fully adjustable
Sensor	Ceramic resistance
Lux Rating	35 Lux
Ambient Temperature	-4°F to 122°F (-20°C to 50°C)
Temperature Range	-58°F to 320°F (-50°C to 160°C)
Read Interval	Every 6 seconds
Accuracy	±1%
Enclosure Rating	NEMA 4 / IP68

Order Codes

Stem Length	°F Scale	°C Scale
2.5” (63mm)	THS32025F	THS32025C
4” (100mm)	THS32040F	THS32040C
6” (150mm)	THS32060F	THS32060C
9” (230mm)	THS32090F	THS32090C
12” (300mm)	THS32120F	THS32120C
15” (370mm)	THS32150F	THS32150C
18” (450mm)	THS32180F	THS32180C
24” (600mm)	THS32240F	THS32240C

Other ranges and connection sizes available upon request. 1/4” NPT and 3/8” NPT connection available. Longer stem lengths available up to 72”. 316 SS wetted parts and sharp tip are available.

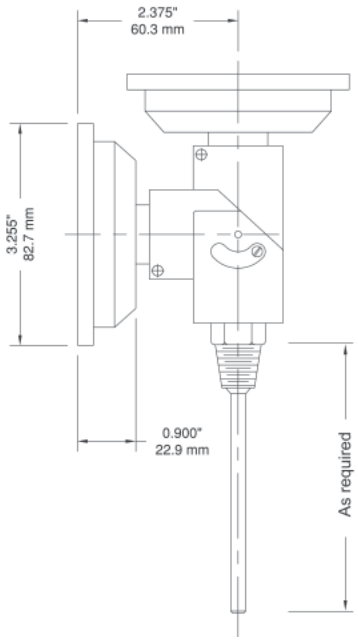

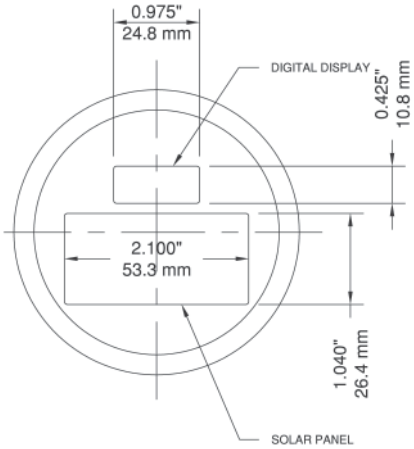

Description & Features:

- Widely specified in the industrial and commercial plumbing trade
- Includes a separable brass or lead free brass thermowell
- Can also be used with TIW/TIW-LF or TDF thermowells
- 3.5” (90mm) and 6” (150mm) stem
- Available in aluminum or Valox® (9”) case
- Organic filled tube (magnifying)
- Dual scale (°F & °C)
- Adjustable angle connection and 360° case rotation for easy installation
- Graphite filled bulb chamber for maximum heat conduction
- ASME B40.200 and ASTM E2251 compliant
- CAN/CGSB-14.4-M88 compliant
- ±1% accuracy
- 5 year warranty

Applications:

- New construction, plumbing, water lines, boilers, heating, ventilation and air conditioning
- Lead free version for potable water systems

LEAD FREE

RoHS compliant

Note: RoHS applies only to 304 SS and 316 SS thermowells

Specifications	
Scale	9” (230mm) aluminum or Valox® case, impact resistant
Lens	Glass (polycarbonate available)
Connection	3/4” NPT with thermowell 1 1/4” - 18 UNEF swivel nut (no thermowell)
Scales	Aluminum, painted white with black markings
Bulb Chamber	Tapered cast aluminum with graphite fill
Tube and Sensing Liquid	Glass (magnifying), organic green fluid (other colours optional)
Adjustment	Fully adjustable
Thermowell	TIM: 3/4” Brass, separable socket (SS optional) TIM-LF: 3/4” Lead free brass, separable socket
Accuracy	±1%
Enclosure Rating	IP54
Warning	**WARNING:** This product can expose you to chemicals including lead, which is known to the State of California to cause cancer and birth defects or other reproductive harm. For more information go to www.P65Warnings.ca.gov.

Note: For an Industrial Thermowell, please refer to the Industrial Thermowell product page

TIM Order Codes (products in bold are normally stock in North America)

	Aluminum Case		Valox® Case	
Stem	**3.5” (90mm)**	**6” (150mm)**	**3.5” (90mm)**	**6” (150mm)**
-40°F to 110°F & -40°C to 40°C	TIM101A	TIM101-6A	TIM101	TIM101-6
0°F to 120°F & -15°C to 50°C	TIM102A	TIM102-6A	TIM102	TIM102-6
0°F to 160°F & -15°C to 70°C	TIM103A	TIM103-6A	TIM103	TIM103-6
30°F to 180°F & 0°C to 80°C	TIM104A	TIM104-6A	TIM104	TIM104-6
30°F to 240°F & 0°C to 115°C	TIM100A	TIM100-6A	TIM100	TIM100-6
30°F to 300°F & 0°C to 150°C	TIM105A	TIM105-6A	TIM105	TIM105-6

Other ranges and connection sizes available upon request. Duct flange available upon request. Union connection available upon request.

Option suffix:
B = Blue fill fluid
R = Red fill fluid

Valox® is a registered trademark of the General Electric Company

Industrial 9” Thermometer, Lead Free Industrial 9” Thermometer

TIM-LF Order Codes (products in bold are normally stock in North America)

	Aluminum Case		Valox® Case	
Stem	**3.5” (90mm)**	**6” (150mm)**	**3.5” (90mm)**	**6” (150mm)**
-40°F to 110°F & -40°C to 40°C	TIM101ALF	TIM101-6ALF	TIM101LF	TIM101-6LF
0°F to 120°F & -15°C to 50°C	TIM102ALF	TIM102-6ALF	TIM102LF	TIM102-6LF
0°F to 160°F & -15°C to 70°C	TIM103ALF	TIM103-6ALF	TIM103LF	TIM103-6LF
30°F to 180°F & 0°C to 80°C	TIM104ALF	TIM104-6ALF	TIM104LF	TIM104-6LF
30°F to 240°F & 0°C to 115°C	TIM100ALF	TIM100-6ALF	TIM100LF	TIM100-6LF
30°F to 300°F & 0°C to 150°C	TIM105ALF	TIM105-6ALF	TIM105LF	TIM105-6LF

Other ranges available upon request.

Option suffix:
B = Blue fill fluid
R = Red fill fluid

Valox® is a registered trademark of the General Electric Company

TIW-LF Thermowell Order Codes (products in bold are normally stock in North America)

Stem Length	Overall Length	Material	Insertion Length	3/4” NPT Connection
3.5” Without Lagging	4.25" (108mm)	Lead Free Brass	2.5” (63mm)	TIW01LF
6” Without Lagging	6.75" (172mm)	Lead Free Brass	5” (127mm)	TIW04LF

3.5” Stem

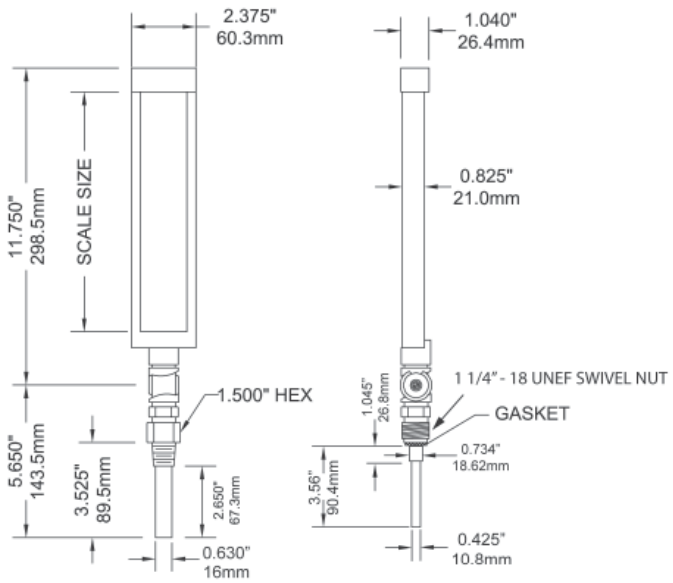

With Socket **Without Socket**

6” Stem

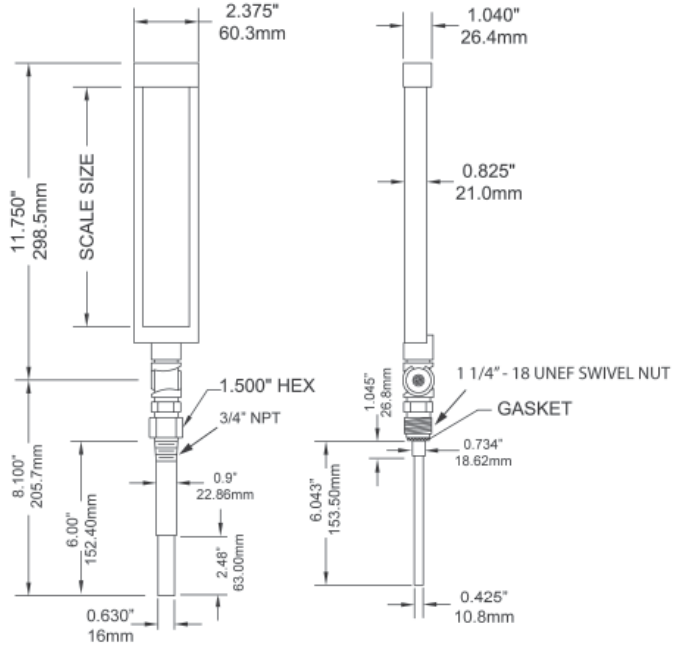

With Socket **Without Socket**

Description & Features:

- Provides an economical and accurate method for measuring the temperature on a flat metallic surface
- 2” (50mm) dial
- Dual scale (°F & °C)
- 3 ranges available
- Easy to install
- ASME B40.200 compliant
- 5 year warranty

Applications:

- Ductwork or motor housings

Specifications	
Dial	2” (50mm) aluminum with black and red markings
Case	Steel, painted black
Lens	Glass
Sensing Element	Bi-metallic coil
Pointer	Aluminum, painted black
Ambient/Process Temperature	Recommended maximum 75% of full scale value
Accuracy	±2% of full scale
Enclosure Rating	IP52

Order Codes (products in bold are normally stock in North America)

Range	Code
0°F to 250°F & -20°C to 120°C	TMT7412
0°F to 500°F & -15°C to 260°C	TMT7410
50°F to 750°F & 10°C to 400°C	TMT7409

Other ranges and connection sizes available upon request.

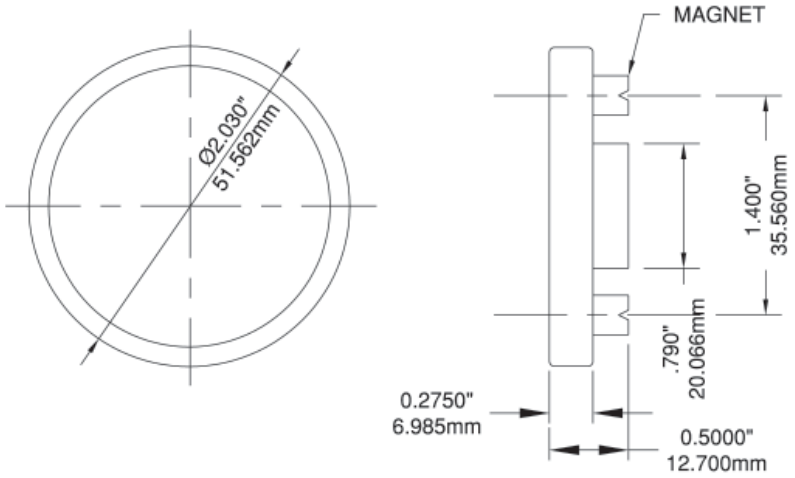

TNR Food & Beverage Bi-Metal Thermometer

Description & Features:

- A general purpose, tamper-proof, 304 stainless steel thermometer
- Hermetically sealed case
- Bi-metallic sensing element for reliable readings
- Back connected
- Stem length from 2.5” (63mm) and up
- ±1% accuracy
- Anti-parallax dial that reduces operator reading errors
- Lexan® lens
- Can be used with TSN thermowells
- 5 year warranty

Applications:

- Food processing and beverage industry

Specifications	
Dial	3” (75mm) dish shaped dial, aluminum with black markings
Case/Ring	AISI 304 SS
Lens	Lexan®, hermetically sealed
Stem	AISI 304 SS
Connection	1/2” NPT, centre back
Sensing Element	Bi-metallic coil
Pointer	Aluminum, painted black
Welding	TIG
Maximum Operating Pressure	125 psi (861 kPa)
Operating Temperature	Recommended maximum 75% of full scale value
Ambient/Process Temperature	Maximum 248°F (120°C)
Accuracy	±1%
Enclosure Rating	IP68

Note: The use of a thermowell is recommended to protect the thermometer in corrosive or pressure applications, as well as to maintain a closed system during its removal from the process

Order Codes (products in bold are normally stock in North America)

Dial and Stem	Code
3” (75 mm) dial with 2.5” (63mm) stem	TNR33025
3” (75 mm) dial with 4” (100mm) stem	TNR33040
3” (75 mm) dial with 6” (150mm) stem	TNR33060
3” (75 mm) dial with 9” (225mm) stem	TNR33090

Dual Scale Range	Code Suffix
-40°F to 120°F & -40°C to 50°C	B2
-40°F to 160°F & -40°C to 70°C	B4
0°F to 200°F & -20°C to 90°C	B6
0°F to 250°F & -20°C to 120°C	B8
50°F to 300°F & 10°C to 150°C	B9
50°F to 400°F & 10°C to 200°C	B10
50°F to 500°F & 10°C to 260°C	B11
150°F to 750°F & 100°C to 400°C	B12
200°F to 1,000°F & 100°C to 540°C	B13

Other ranges and connection sizes available upon request.

*(i.e. 3” TNR with 4” (100mm) stem, -40°F to 160°F & -40°C to 70°C = **TNR33040B4**)*

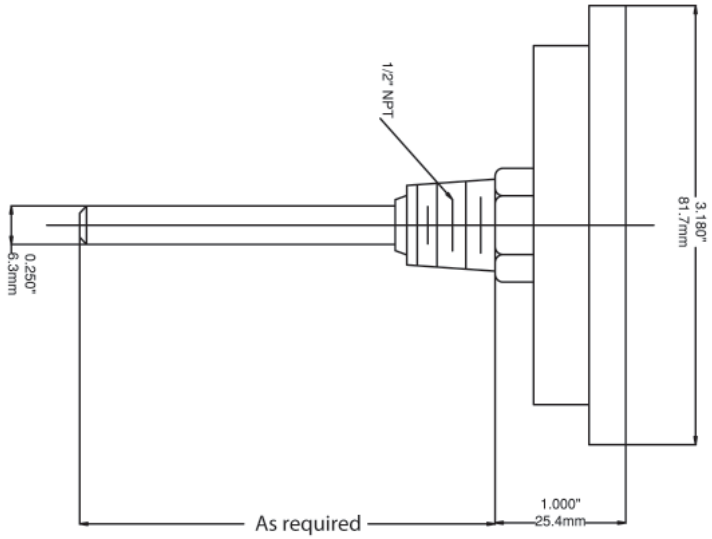

Lexan® is a registered trademark of the General Electric Company

Note: RoHS applies only with SS bulb, SS capillary and SS thermowell

Description & Features:

- Versatile, heavy duty gas or vapour thermometer for remote reading
- Many varieties are available from stock; special requests are built to order
- Brass or stainless steel capillary and bulbs
- Plain, sliding union or thermowell connection
- Capillary lengths over 5' available
- 1/2" bulb diameter
- Panel or direct mount
- Gas: ±1% accuracy; Vapour: ±2% accuracy
- ASME B40.200 compliant
- 5 year warranty

Applications:

- For remote temperature sensing of tanks, reservoirs and process lines
- Appropriate for industrial and commercial installations

Specifications	
Dial	2.5" (63mm), 3.5" (90mm), 4" (100mm), 4.5" (115mm), 6" (150mm), 8.5" (215mm)
Case/Ring	2.5" (63mm): 316 SS 3.5" (90mm), 4" (100mm): Steel, painted black Others: Aluminum, painted black
Lens	2.5" (63mm) to 6" (150mm): Glass Others: Polycarbonate
Connection	Plain, Brass or 316 SS sliding union, Brass or 316 SS thermowell
Sensing Fill	Gas or vapour
Movement	Gas: 304 SS Vapour: Brass
Pointer	Aluminum, painted black
Accuracy	Gas: ±1% of full scale value Vapour: ±2% of full scale value
Bulb	6" (150mm), 1/2" diameter standard Custom sizes available
Warning (brass connection only)	⚠ **WARNING:** This product can expose you to chemicals including lead, which is known to the State of California to cause cancer and birth defects or other reproductive harm. For more information go to www.P65Warnings.ca.gov.

Selection Notes

Gas-filled Systems

- For industrial applications requiring accurate and uniform response over the entire range. Scale is linear
- The capillary should be located in an area that has an ambient temperature of approximately 74°F (23°C). If the temperature around the capillary is significantly higher than 74°F (23°C), the thermometer will show a reading that is higher than actual process temperature. If the capillary ambient temperature is significantly lower than 74°F (23°C), the reading will be lower than the actual process temperature

Vapour-filled Systems

- Have non-linear scales and provide economical but reliable service for most industrial applications
- To ensure accurate readings, the operating temperature should fall in the 2/3 of the scale
- Thermometer may show a temperature offset to actual temperature value when the bulb and thermometer are installed at different elevations. To avoid this, install the bulb and thermometer at the same elevation wherever possible. Offset errors only occur when the thermometer's ambient temperature is higher than the bulb temperature

Capillary Protection

- Is recommended to protect the capillary from physical damage
- Copper braided armour is used in conjunction with brass bulb
- Stainless steel armour shall be used in conjunction with 316 SS bulb

Note: Winters recommends using a stainless steel bulb and capillary for all process temperatures above 500°F (260°C)

Gas-filled Systems - Order Codes (products in bold are normally in stock)

Dial Size	2.5" (63mm)				3.5" (90mm)	
Bulb and Capillary Material	SS					
Capillary Length and Connection	5' Bottom	5' Back	10' Bottom	10' Back	5' Back	10' Back
30°F to 240°F&C	-	-	-	-	TRR12353050G18	-
40°F to 220°F&C	TRR11253050G19	TRR12253050G19	TRR11253100G19	TRR12253100G19	-	TRR12353100G19
80°F to 300°F&C	TRR11253050G20	TRR12253050G20	TRR11253100G20	TRR12253100G20	TRR12353050G20	-
100°F to 400°F&C	TRR11253050G21	TRR12253050G21	TRR11253100G21	TRR12253100G21	TRR12353050G21	TRR12353100G21
100°F to 500°F&C	TRR11253050G22	-	-	-	-	-

Dial Size	4" (100mm)			
Bulb and Capillary Material	SS			
Capillary Length and Connection	5' Bottom	5' Back	10' Bottom	10' Back
30°F to 240°F&C	-	TRR12403050G18	-	TRR12403100G18
40°F to 220°F&C	-	-	-	TRR12403100G19
80°F to 300°F&C	TRR11403050G20	TRR12403050G20	TRR11403100G20	TRR12403100G20
100°F to 400°F&C	TRR11403050G21	TRR12403050G21	-	-
100°F to 500°F&C	TRR11403050G22	-	TRR11403100G22	-

Dial Size	4.5" (115mm)			
Bulb and Capillary Material	SS			
Capillary Length and Connection	5' Bottom	5' Back	10' Bottom	10' Back
30°F to 240°F&C	-	TRR12453050G18	-	TRR12453100G18
40°F to 220°F&C	TRR11453050G19	TRR12453050G19	TRR11453100G19	TRR12453100G19
80°F to 300°F&C	TRR11453050G20	TRR12453050G20	TRR11453100G20	TRR12453100G20
100°F to 400°F&C	TRR11453050G21	TRR12453050G21	TRR11453100G21	TRR12453100G21
100°F to 500°F&C	TRR11453050G22	-	TRR11453100G22	-

Gas-filled Systems - Order Codes (products in bold are normally in stock)

Dial Size	6" (150mm)			
Bulb and Capillary Material	SS			
Capillary Length and Connection	5' Bottom	5' Back	10' Bottom	10' Back
30°F to 240°F&C	-	TRR12603050G18	-	-
40°F to 220°F&C	TRR11603050G19	TRR12603050G19	TRR11603100G19	TRR12603100G19
80°F to 300°F&C	TRR11603050G20	TRR12603050G20	-	TRR12603100G20
100°F to 400°F&C	TRR11603050G21	TRR12603050G21	-	TRR12603100G21
100°F to 500°F&C	TRR11603050G22	-	TRR11603100G22	-

Vapour-filled Systems - Order Codes (products in bold are normally in stock)

Dial Size	2.5" (63mm)				3.5" (90mm)
Bulb and Capillary Material	Brass and Copper				
Capillary Length and Connection	5' Bottom	5' Back	10' Bottom	10' Back	5' Back
0°F to 180°F&C	TRR31251050V11	-	TRR31251100V11	-	TRR32351050V11
20°F to 220°F&C	-	TRR32251050V12	-	-	-
50°F to 250°F&C	TRR31251050V13	-	TRR31251100V13	TRR32251100V13	-
100°F to 350°F&C	TRR31251050V15	TRR32251050V15	TRR31251100V15	TRR32251100V15	-

Dial Size	4" (100mm)		
Bulb and Capillary Material	Brass and Copper		
Capillary Length and Connection	5' Back	10' Bottom	10' Back
0°F to 180°F&C	-	-	TRR32401100V11
20°F to 220°F&C	-	-	TRR32401100V12
50°F to 250°F&C	-	-	TRR32401100V13
100°F to 350°F&C	TRR32401050V15	TRR31401100V15	TRR32401100V15

Dial Size	4.5" (115mm)			
Bulb and Capillary Material	Brass and Copper			
Capillary Length and Connection	5' Bottom	5' Back	10' Bottom	10' Back
0°F to 180°F&C	TRR31451050V11	TRR32451050V11	TRR31451100V11	TRR32451100V11
20°F to 220°F&C	-	TRR32451050V12	TRR31451100V12	TRR32451100V12
50°F to 250°F&C	-	TRR32451050V13	-	-
100°F to 350°F&C	TRR31451050V15	TRR32451050V15	TRR31451100V15	TRR32451100V15

Dial Size	6" (150mm)			
Bulb and Capillary Material	Brass and Copper			
Capillary Length and Connection	5' Bottom	5' Back	10' Bottom	10' Back
0°F to 180°F&C	TRR31601050V11	TRR32601050V11	TRR31601100V11	TRR32601100V11
20°F to 220°F&C	TRR31601050V12	-	TRR31601100V12	-
50°F to 250°F&C	-	TRR32601050V13	-	TRR32601100V13
100°F to 350°F&C	TRR31601050V15	TRR32601050V15	-	TRR32601100V15

Built-to-Order Codes

Specify the code for each section and the range:
e.g. TRR3 - 2 - 35 - 1 - 05 - 1 - 50/250°F
(Section I - II - III - IV - V - VI - range)

TRR's are made to order in 4-6 weeks. For stocked TRR's see the previous page

Section	Code	Description Type
I	TRR1	Gas Remote Reading
	TRR2	Gas Direct Reading
	TRR3	Vapour Remote Reading
	TRR4	Vapour Direct Reading
II	Case Type, Connection	
	1	Bottom connection, back flange
	2	Back connection, front flange
	3	Back connection, back flange
	4	Vari-angle connection, (Direct reading only)
III	Dial Size	
	25	2.5" (63mm)
	35	3.5" (90mm) Back connection only
	40	4" (100mm)
	45	4.5" (115mm)
	60	6" (150mm)
	85	8.5" (215mm)

Section	Code	Description Bulb and Capillary			
		Bulb Dimensions	Bulb Material	Capillary Material	Capillary Protection
IV	1	6" (150mm) OAL, 1/2" OD	Brass	Copper	Copper Dbl Braided
	2	6" (150mm) OAL, 1/2" OD	316 SS	316 SS	None
	3	6" (150mm) OAL, 1/2" OD	316 SS	316 SS	SS Armour
V	Capillary Length (ft)				
	05	05			
	10	10			
	30	30			
	XX	XX			
VI	Connection				
	0	None			
	1	1/2" NPT brass sliding union			
	2	1/2" NPT SS sliding union			
	3	3/4" NPT brass sliding union			
	4	3/4" NPT SS sliding union			
	5	1/2" NPT brass thermowell			
	6	1/2" NPT SS thermowell			
	7	3/4" NPT brass thermowell			
	8	3/4" NPT SS thermowell			
	Z	Custom connection			

Ranges	°F only	°F & °C	°C only
Gas Ranges	-40°F to 110°F**	-40°F to 110°F & -40°C to 40°C**	-40°C to 40°C**
	-20°F to 120°F**	-20°F to 120°F & -28°C to 48°C**	-28°C to 48°C**
	30°F to 150°F**	30°F to 150°F & 0°C to 65°C**	0°C to 65°C**
	0°F to 180°F**	0°F to 180°F & -20°C to 80°C**	-20°C to 80°C**
	30°F to 240°F	30°F to 240°F & 0°C to 115°C	0°C to 115°C
	40°F to 220°F	40°F to 220°F & 5°C to 105°C	5°C to 105°C
	80°F to 300°F	80°F to 300°F & 30°C to 150°C	30°C to 150°C
	100°F to 400°F*	100°F to 400°F & 40°C to 200°C*	40°C to 200°C*
	100°F to 500°F*	100°F to 500°F & 40°C to 260°C*	40°C to 260°C*
	0°F to 600°F*	0°F to 600°F & -20°C to 320°C*	-20°C to 320°C*
	200°F to 1,000°F*	200°F to 1,000°F & 90°C to 540°C*	90°C to 540°C*
Vapour Ranges	-40°F to 110°F	-40°F to 110°F & -40°C to 40°C	-40°C to 40°C
	0°F to 100°F	0°F to 100°F & -20°C to 38°C	-20°C to 38°C
	0°F to 180°F	0°F to 180°F & -20°C to 80°C	-20°C to 80°C
	20°F to 220°F	20°F to 220°F & 0°C to 100°C	0°C to 100°C
	50°F to 250°F	50°F to 250°F & 10°C to 120°C	10°C to 120°C
	100°F to 350°F	100°F to 350°F & 40°C to 175°C	40°C to 175°C
	200°F to 450°F	200°F to 450°F & 100°C to 230°C	100°C to 230°C

*Ranges require stainless steel capillary and bulb
**Ranges not available with gas direct reading thermometers

Please contact us for:

Duct flanges, sliding union, various bulb dimensions, averaging bulb (gas only), other ranges, stainless steel 4" (100mm) and 6" (150mm) cases and capillary available on gas remote/direct reading models

Note: The use of a thermowell is recommended to protect the thermometer in corrosive or pressure applications, as well as to maintain a closed system during its removal from the process.

4” Back Connection, Front Flange, Plain Bulb

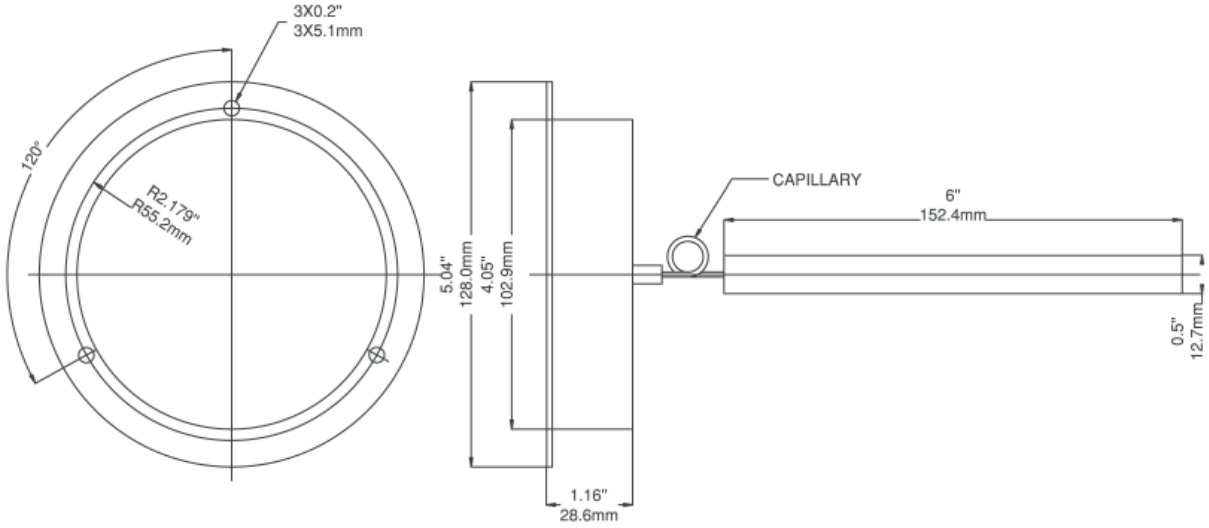

4” Back Connection, Front Flange, Sliding Union

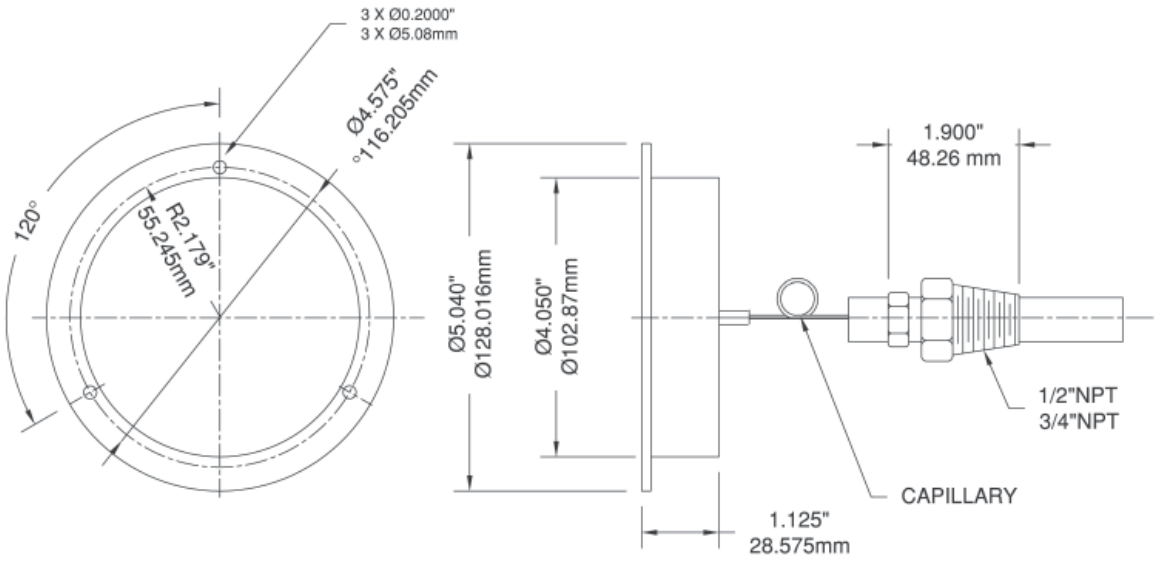

4” Bottom Connection, Back Flange, Sliding Union

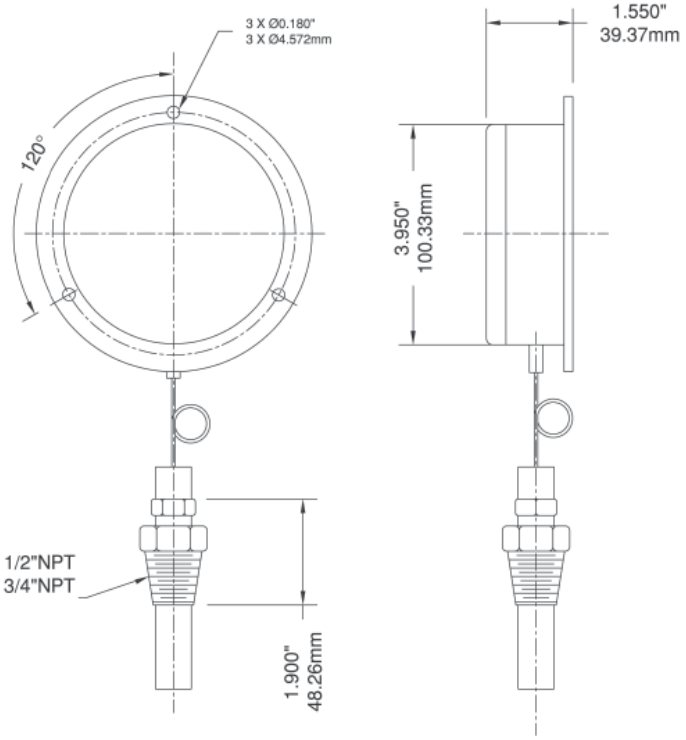

4.5” Bottom Connection, Back Flange, Plain Bulb

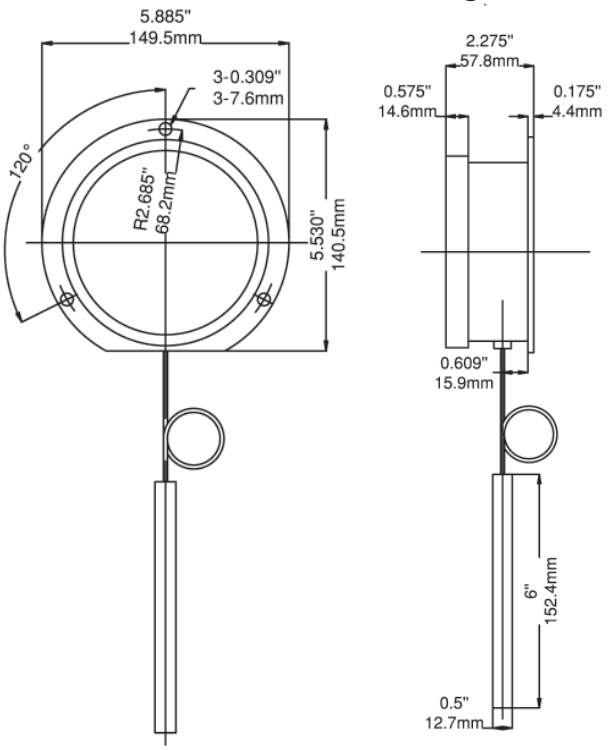

6” Bottom Connection, Back Flange, Sliding Union

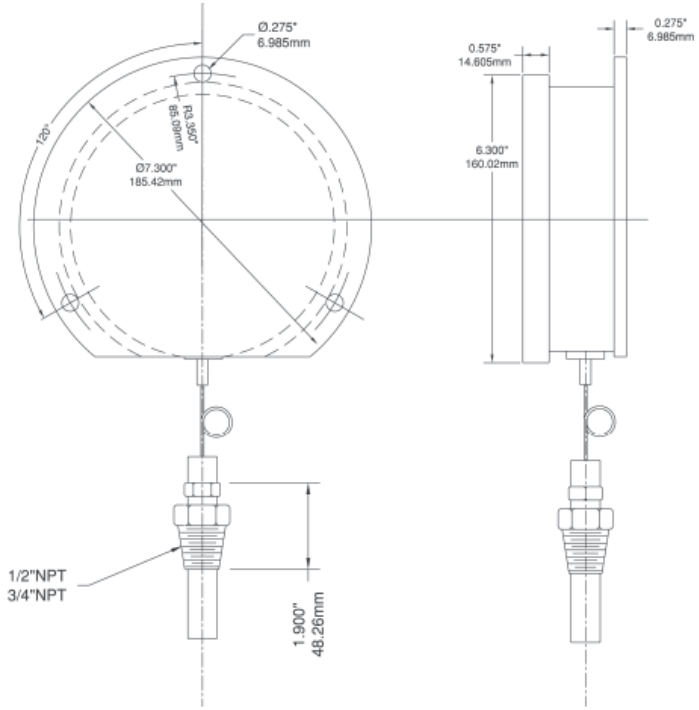

6” Bottom Connection, Back Flange, Sliding Union

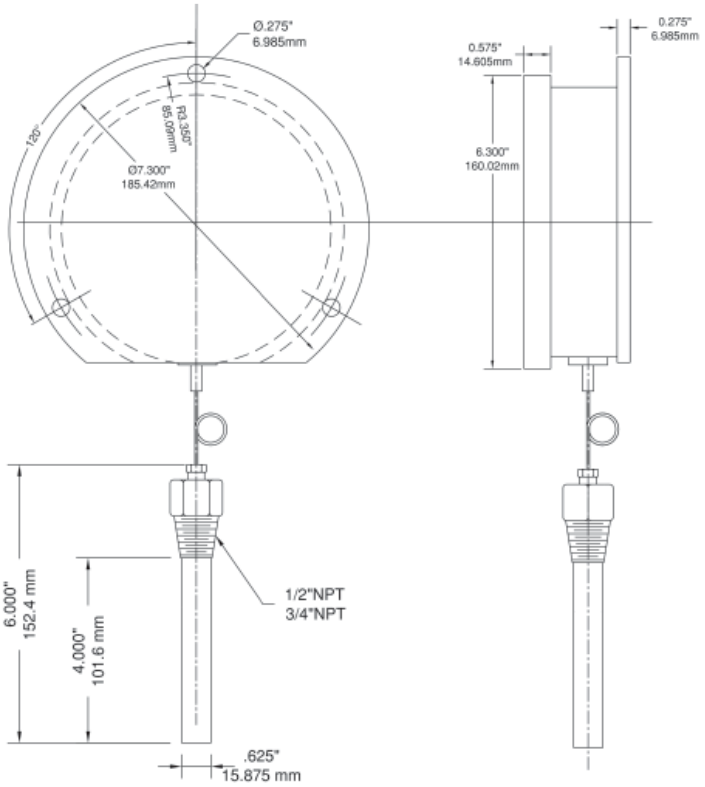

Note: RoHS applies only with SS TIW thermowell

Description & Features:

- A versatile thermometer that provides a solar powered digital read out commonly used in the industrial and commercial plumbing trade
- Low light compatible (16 Lux minimum)
- Includes a separable thermowell
- Durable ABS case
- Switchable temperature scale (°F or °C)
- Adjustable angle connection for easy installation
- ±1% accuracy
- ASME B40.200 compliant
- 5 year warranty

Applications:

- New construction, plumbing, water lines, boilers, heating, ventilation and air conditioning

Specifications	
Display	2.55” x 4.67” (63.7mm x 116.7mm) solar powered display
Housing	High impact ABS plastic housing with aluminum movable parts
Lux Rating	16 Lux
Sensing Element	Liquid
Stem Length	3.5” (90mm), 6” (150mm)
Connection / Thermowell	3/4” NPT, with brass thermowell standard, (SS optional) 1-1/4” UNEF swivel nut (without thermowell)
Temperature Range	-50°F to 320°F (-45°C to 160°C)
Read Interval	Every 6 seconds
Ambient Temperature	14°F to 150°F (-10°C to 65°C)
Process Temperature	-50°F to 320°F (-45°C to 160°C)
Accuracy	±1%
Enclosure Rating	NEMA 5 / IP54
Warning (brass thermowell only)	⚠ **WARNING:** This product can expose you to chemicals including lead, which is known to the State of California to cause cancer and birth defects or other reproductive harm. For more information go to www.P65Warnings.ca.gov.

Order Codes (products in bold are normally stock in North America)

Stem/Ranges	Code (Includes Thermowell)
3.5” (90mm) Stem (-50°F to 320°F or -45°C to 160°C)	TSD9ITSD
6” (150mm) Stem (-50°F to 320°F or -45°C to 160°C)	TSD9ITSD6

Other ranges and connection sizes available upon request. Duct flange and union connection available upon request. 6” (150mm) stem available. For an Industrial Thermowell, please refer to the Industrial Thermowell product page.

3.5” Stem with Thermowell

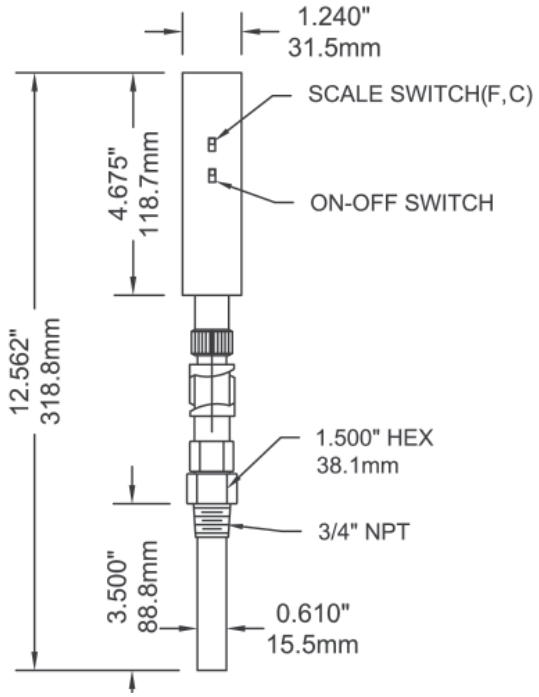

3.5” Stem without Thermowell

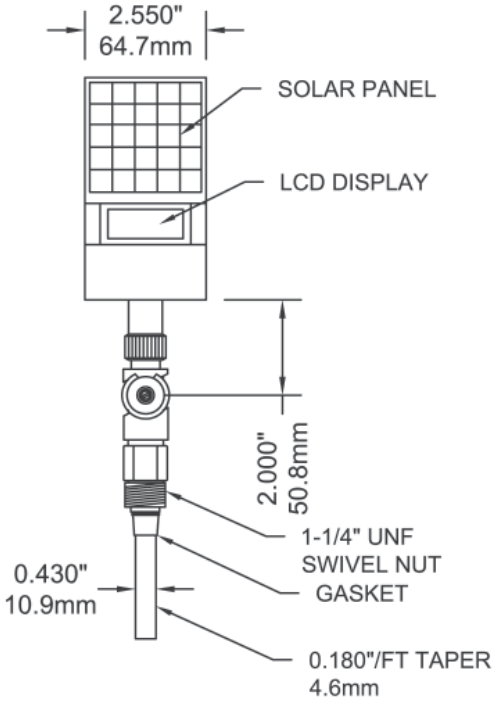

6” Stem with Thermowell

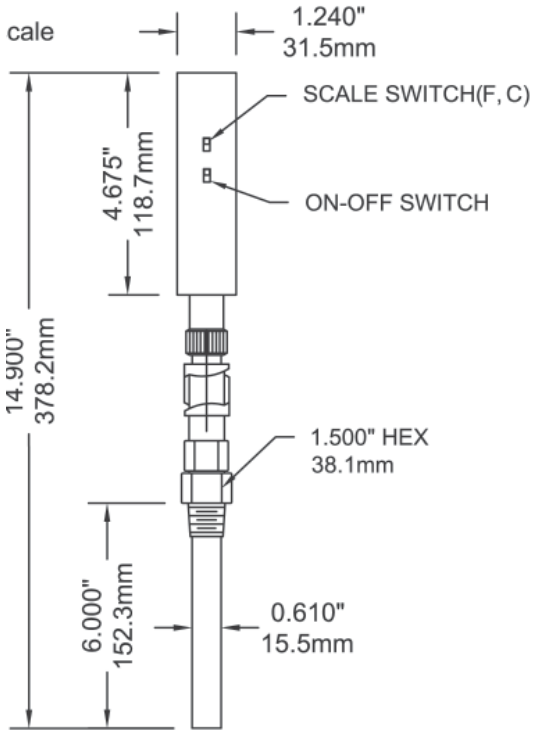

6” Stem without Thermowell

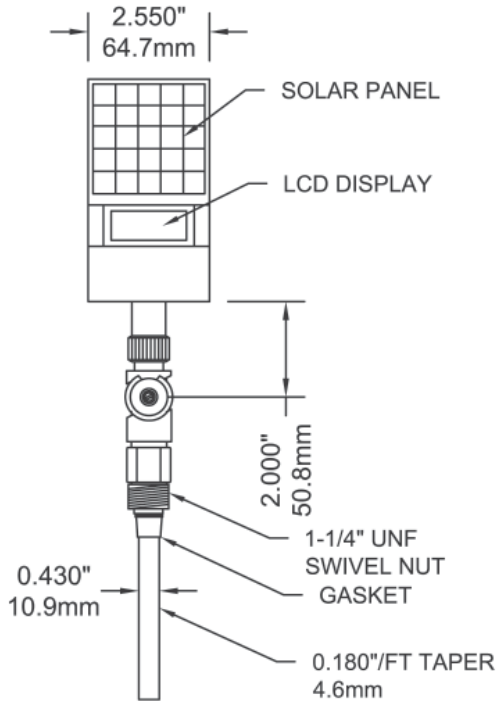

Dial Type

Scale Type

Description & Features:

- An economical and accurate way to measure air or water temperatures
- Separable brass or lead free brass thermowell
- Bi-metallic element (dial type only)
- Dual scale (°F & °C)
- Dial type or vertical scale type
- Easy to install
- 1/2" NPT process connection
- ASME B40.200 compliant
- 5 year warranty

Applications:

- Hot water lines, boilers and hydronic heating
- Lead free version for potable water systems

Dial Type Specifications	
Dial	2" (50mm), 2.5" (63mm) aluminum, painted white with black and red markings
Case	Aluminum
Lens	Glass
Ring	Steel, chrome plated
Thermowell	TSW: Brass (HPB59-1), 1/2" NPT standard, separable TSW-LF: Lead free brass, 1/2" NPT standard, separable
Stem	Brass
Sensing Element	Bi-metallic element
Pointer	Aluminum, painted black
Recalibrator	Standard
Accuracy	±1%
Warning	⚠ **WARNING:** This product can expose you to chemicals including lead, which is known to the State of California to cause cancer and birth defects or other reproductive harm. For more information go to www.P65Warnings.ca.gov.

Scale Type Specifications	
Scale/Case	8" (200mm) scale with steel case, painted white with black markings
Tube	#N-16 glass
Sensing Liquid	Organic fluid
Thermowell	TSW: Brass (HPB59-1), 1/2" NPT standard, separable TSW-LF: Lead free brass, 1/2" NPT standard, separable
Accuracy	±1%
Warning	⚠ **WARNING:** This product can expose you to chemicals including lead, which is known to the State of California to cause cancer and birth defects or other reproductive harm. For more information go to www.P65Warnings.ca.gov.

TSW Dial Order Codes (products in bold are normally stock in North America)

Dial	Range	Connection	Code
2" (50mm)	30°F to 250°F & 0°C to 120°C	1/2" NPT centre back	TSW174-2
2.5" (63mm)	30°F to 250°F & 0°C to 120°C	1/2" NPT centre back	TSW174
		3/4" Sweatwell	TSW174-SW

Other ranges, stem lengths, dial and connection sizes available upon request.

TSW Scale Order Codes (products in bold are normally stock in North America)

Scale	Range	Connection	Code
8" (200mm)	40°F to 280°F & 5°C to 135°C	Straight	TSW172
		Angle	TSW173

Other ranges and connection sizes available upon request.

Hot Water Thermometer, Lead Free Hot Water Thermometer

TSW-LF Dial Order Codes (products in bold are normally stock in North America)

Dial	Range	Connection	Code
2" (50mm)	30°F to 250°F & 0°C to 120°C	1/2" NPT centre back	TSW174-2LF
2.5" (63mm)	30°F to 250°F & 0°C to 120°C	1/2" NPT centre back	TSW174LF
		3/4" Sweatwell	TSW174-SWLF

Other ranges, stem lengths, dial and connection sizes available upon request.

TSW-LF Scale Order Codes (products in bold are normally stock in North America)

Scale	Range	Connection	Code
8" (200mm)	40°F to 280°F & 5°C to 135°C	Straight	TSW172LF
		Angle	TSW173LF

Other ranges and connection sizes available upon request.

Thermowell Order Codes (products in bold are normally stock in North America)

Connection	Material	Code
1/2" NPT (for TSW174-2)	Lead Free Brass	TSW45LF
1/2" NPT (for TSW174)	Lead Free Brass	TSW65LF
1/2" NPT (for TSW174-SW)	Lead Free Brass	TSW85LF
1/2" NPT (for TSW172 & TSW173)	Lead Free Brass	TSW25LF

2" Dial Type

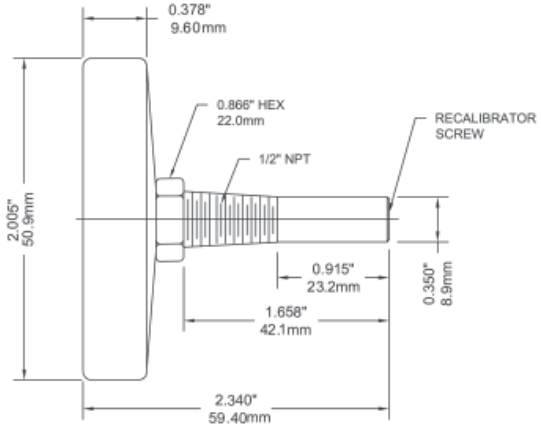

2.5" Dial Type

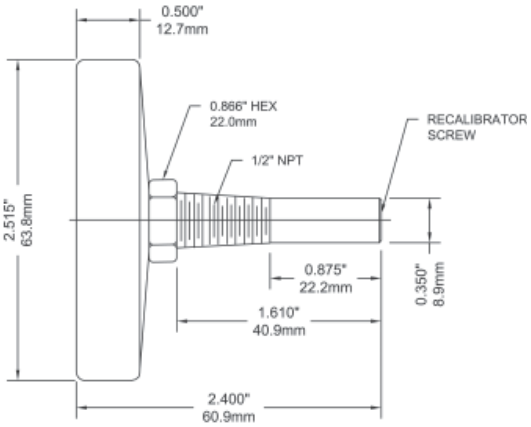

Scale Type

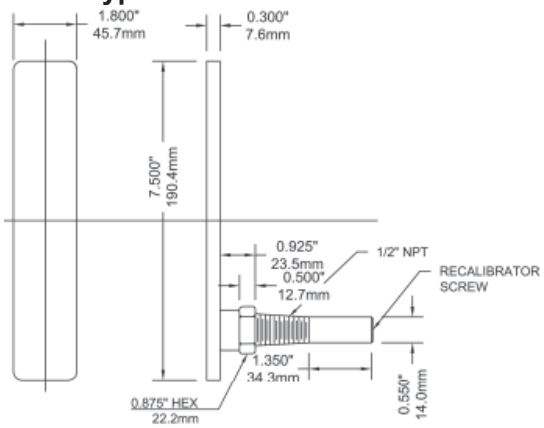

Back Connection

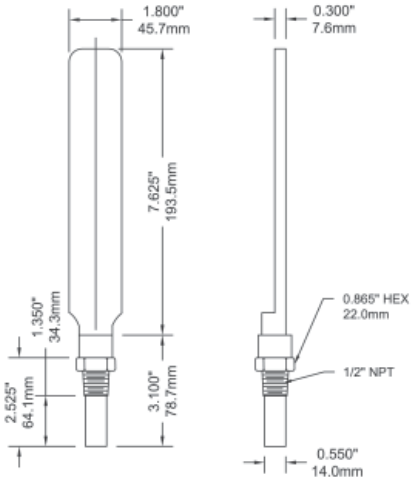

Bottom Connection

Optional Thermowell

Description & Features:

- Measures both pressure and temperature on the same dial
- 2.5” (63mm) and 3” (75mm) dials
- Dual scale (°F & °C)
- Back or bottom connection
- Brass wetted parts
- 1” (25mm), 2” (50mm) and 2.5” (63mm) stems
- Multiple pressure and temperature ranges available
- Can be used with TST thermowells
- Ranges are compliant to industry standard ASME Boiler Code Section IV HG-612
- 5 year warranty

Applications:

- Hot water and steam pressure for boilers

Specifications	
Dial	2.5” (63mm), 3” (75mm) aluminum, painted white
Case	Steel, painted black
Lens	2.5” (63mm): Acrylic, threaded 3” (75mm): Glass
Ring	3” (75mm): Chrome
Stem	Brass
Socket	Brass
Tube	Phosphor bronze
Movement	Brass and phosphor bronze
Sensing Element	Temperature: Bi-metallic coil Pressure: Bourdon tube
Pointer	Aluminum, anodized black
Welding	Tin-alloy solder
Pressure Limit	75% of full scale range
Ambient Temperature	23°F to 122°F (-5°C to 50°C)
Process Temperature	75% of full scale range
Accuracy	Pressure: ±3-2-3% Temperature: ±3% of full scale
Enclosure Rating	IP50
Warning	⚠ **WARNING:** This product can expose you to chemicals including lead, which is known to the State of California to cause cancer and birth defects or other reproductive harm. For more information go to www.P65Warnings.ca.gov.

Order Codes (products in bold are normally stock in North America)

Range	Dial	Connection	Stem Length	Code	Tridicator Shut-off Thermowell
0-75psi/kPa, 70°F to 320°F & 20°C to 160°C	2.5” (63mm)	1/4” NPT, Back	1” (25mm)	TTD410	-
0-75psi/kPa, 70°F to 320°F & 20°C to 160°C	2.5” (63mm)	1/4” NPT, Extension Back	2” (50mm)	TTD401	TST025
0-75psi/kPa, 70°F to 320°F & 20°C to 160°C	2.5” (63mm)	1/4” NPT, Back	2” (50mm)	TTD404	
0-75psi/kPa, 70°F to 320°F & 20°C to 160°C	3” (75mm)	1/2” NPT, Bottom	2.5” (63mm)	TTD403	TST050
0-75psi/kPa, 70°F to 320°F & 20°C to 160°C	3” (75mm)	1/2” NPT, Back	2.5” (63mm)	TTD402	
0-100psi/kPa, 70°F to 320°F & 20°C to 160°C	3” (75mm)	1/2” NPT, Bottom	2.5” (63mm)	TTD409	
0-100psi/kPa, 70°F to 320°F & 20°C to 160°C	3” (75mm)	1/2” NPT, Back	2.5” (63mm)	TTD408	
0-200psi/kPa, 70°F to 320°F & 20°C to 160°C	3” (75mm)	1/2” NPT, Bottom	2.5” (63mm)	TTD405	
0-200psi/kPa, 70°F to 320°F & 20°C to 160°C	3” (75mm)	1/2” NPT, Back	2.5” (63mm)	TTD407	
0-250psi/kPa, 70°F to 320°F & 20°C to 160°C	3” (75mm)	1/2” NPT, Bottom	2.5” (63mm)	TTD399	
0-250psi/kPa, 70°F to 320°F & 20°C to 160°C	3” (75mm)	1/2” NPT, Back	2.5” (63mm)	TTD398	

Other ranges, stem lengths, dial and connection sizes available upon request.

2.5” Back Connection, 1” Stem

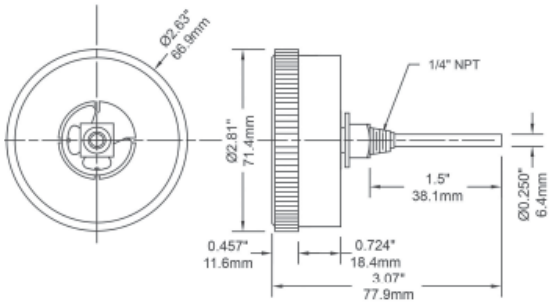

2.5” Back Connection

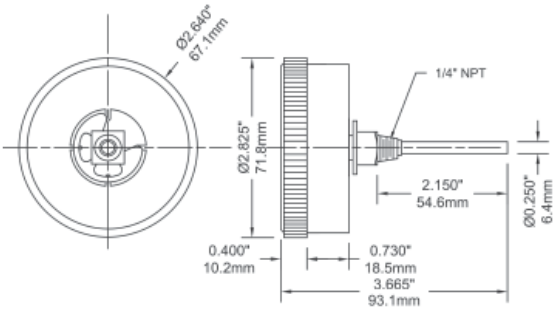

2.5” Extension Back Connection

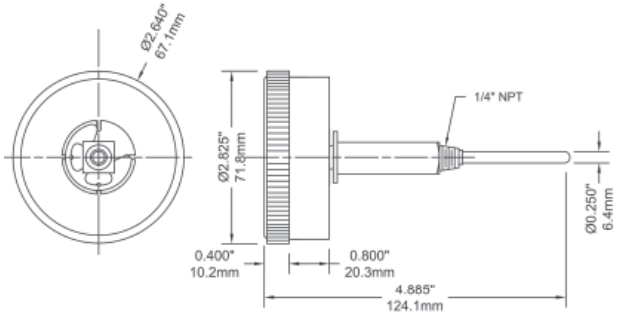

3” Bottom Connection

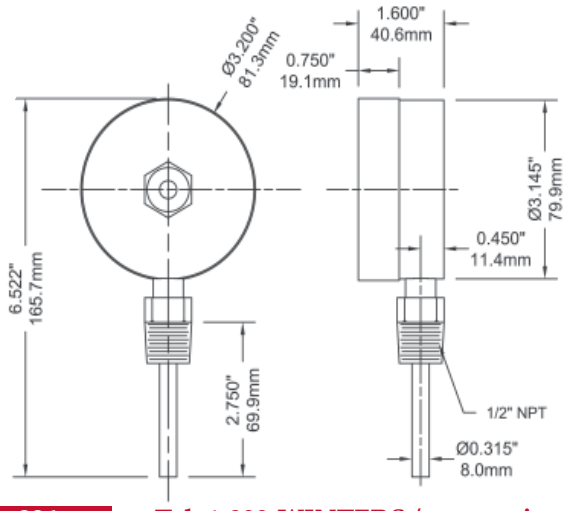

3” Back Connection

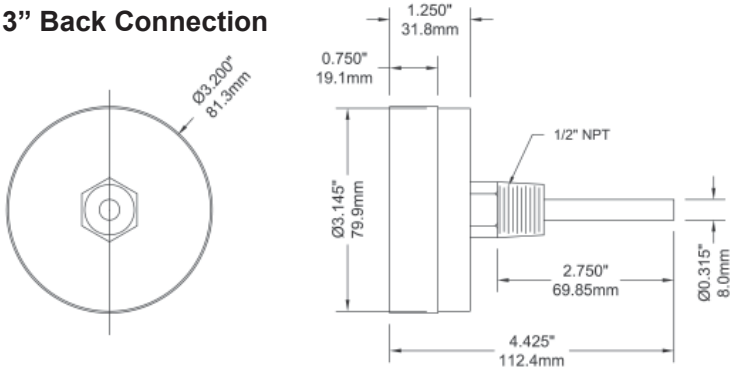

Description & Features:

- Available in a wide range of materials for use on most applications
- Standard “stepped construction” offering is complemented by an array of custom thermowells including: straight, tapered, sanitary and flanged configurations
- CRN registered
- 5 year warranty

Applications:

- Allows for the creation of a “sealed system”, whereby the thermometer can be removed from the application without the need for shutting down or draining the system
- To protect the thermometer from possible exposure to the process media

RoHS compliant

RoHS applies only to 304 SS and 316 SS thermowells

Specifications	
Thermometer Connection	1/2” NPTF connection standard Other thread sizes are available upon request
Process Connection	3/4”, 1/2” or 1” NPT connection standard Other thread sizes are available upon request
Bore	0.260” (6.5mm) bore standard
Construction	Stepped construction standard Tapered construction available upon request
Material	Brass, 304 SS, 316 SS standard Other materials available upon request
Warning (brass thermowells only	⚠ **WARNING:** This product can expose you to chemicals including lead, which is known to the State of California to cause cancer and birth defects or other reproductive harm. For more information go to www.P65Warnings.ca.gov.

Material	Pressure - Temperature Rating (PSI)						
	70°F (21°C)	200°F (93°C)	400°F (204°C)	600°F (316°C)	800°F (427°C)	1,000°F (538°C)	1,200°F (649°C)
Brass	5,000	4,200	1,000	-	-	-	-
304 SS	7,000	6,200	5,600	5,400	5,200	4,500	1,650
316 SS	7,000	7,000	6,400	6,200	6,100	5,100	2,500

Note: For process media velocities above 10m/s (30 feet/s) contact Winters

Order Codes (Thermowells without lag. Products in bold are normally stock in North America)

Stem Length A	NPT Connection P	Material	Code	Standard Insertion Length U	Shank Diameter
2.5" (63mm)	1/2"	Brass	TBR2550	1-3/8" (35mm)	1/2" (12.5mm)
		304 SS	TBR2550-1		
		316 SS	TBR2550-2		
	3/4"	Brass	TBR25		
		304 SS	TBR25-1		
		316 SS	TBR25-2		
4" (100mm)	1/2"	Brass	TBR3550	2.5" (63mm)	1/2" (12.5mm)
		304 SS	TBR3550-1		
		316 SS	TBR3550-2		
	3/4"	Brass	TBR35		
		304 SS	TBR35-1		
		316 SS	TBR35-2		
	1"	Brass	TBR35100		
		304 SS	TBR35100-1		
		316 SS	TBR35100-2		
6" (150mm)	1/2"	Brass	TBR650	4.5" (115mm)	5/8" (16mm)
		304 SS	TBR650-1		
		316 SS	TBR650-2		
	3/4"	Brass	TBR6		3/4" (19mm)
		304 SS	TBR6-1		
		316 SS	TBR6-2		
	1"	Brass	TBR6100		7/8" (22mm)
		304 SS	TBR6100-1		
		316 SS	TBR6100-2		
9" (229mm)	1/2"	Brass	TBR950	7.5" (190mm)	5/8" (16mm)
		304 SS	TBR950-1		
		316 SS	TBR950-2		
	3/4"	Brass	TBR9		3/4" (19mm)
		304 SS	TBR9-1		
		316 SS	TBR9-2		
	1"	Brass	TBR9100		7/8" (22mm)
		304 SS	TBR9100-1		
		316 SS	TBR9100-2		
12" (305mm)	1/2"	Brass	TBR1250	10.5" (266mm)	5/8" (16mm)
		304 SS	TBR1250-1		
		316 SS	TBR1250-2		
	3/4"	Brass	TBR12		3/4" (19mm)
		304 SS	TBR12-1		
		316 SS	TBR12-2		
	1"	Brass	TBR12100		7/8" (22mm)
		304 SS	TBR12100-1		
		316 SS	TBR12100-2		
15" (370mm)	3/4"	Brass	TBR15	13" (330mm)	3/4" (19mm)
		304 SS	TBR15-1		
		316 SS	TBR15-2		

Order Codes (Thermowells with lag.)

Stem Length A	NPT Connection P	Material	Code	Standard Insertion Length U	Lag Length T	Shank Diameter
6” (150mm)	1/2”	Brass	TBRN650	2.5” (63mm)	2” (50mm)	1/2” (12.5mm)
		304 SS	TBRN650-1			
		316 SS	TBRN650-2			
	3/4”	Brass	TBRN6			
		304 SS	TBRN6-1			
		316 SS	TBRN6-2			
	1”	Brass	TBRN6100			
		304 SS	TBRN6100-1			
		316 SS	TBRN6100-2			
9” (229mm)	1/2”	Brass	TBRN950	4.5” (115mm)	3” (75mm)	5/8” (16mm)
		304 SS	TBRN950-1			
		316 SS	TBRN950-2			
	3/4”	Brass	TBRN9			3/4” (19mm)
		304 SS	TBRN9-1			
		316 SS	TBRN9-2			
	1”	Brass	TBRN9100			7/8” (22mm)
		304 SS	TBRN9100-1			
		316 SS	TBRN9100-2			
12” (305mm)	1/2”	Brass	TBRN1250	7.5” (190mm)		5/8” (16mm)
		304 SS	TBRN1250-1			
		316 SS	TBRN1250-2			
	3/4”	Brass	TBRN12			3/4” (19mm)
		304 SS	TBRN12-1			
		316 SS	TBRN12-2			
	1”	Brass	TBRN1210			7/8” (22mm)
		304 SS	TBRN1210-1			
		316 SS	TBRN1210-2			

Other configurations available. 1/4” NPT thermometer connection available. BSP threads available upon request. Tapered construction available upon request. Other lengths available up to 48” (welded construction only). Other materials such as Monel®, Inconel®, Hastelloy® C and Titanium are available upon request.

Note: Standard well is stepped as shown to 0.5” OD except U=2.5”. Straight shank supplied as an option. Specify additional lagging extensions as needed

Option suffix:
SCK = Socket Conversion Kit
W60 = Brass cap and chain (1/2”)
W60-1 = Stainless steel cap and chain (1/2”)

Hastelloy® is a registered trademark of Haynes International, Inc.
Inconel® is a registered trademark of Special Metals Corporation
Monel® is a registered trademark of Inco Alloys International

Standard Thermowell without lag

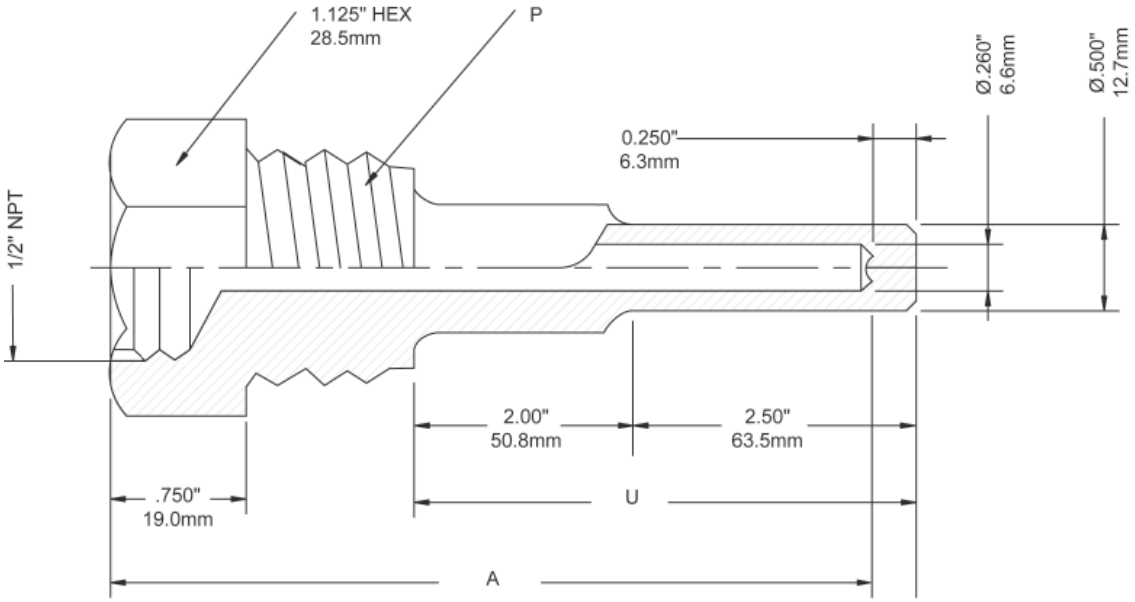

Standard Thermowell with lag

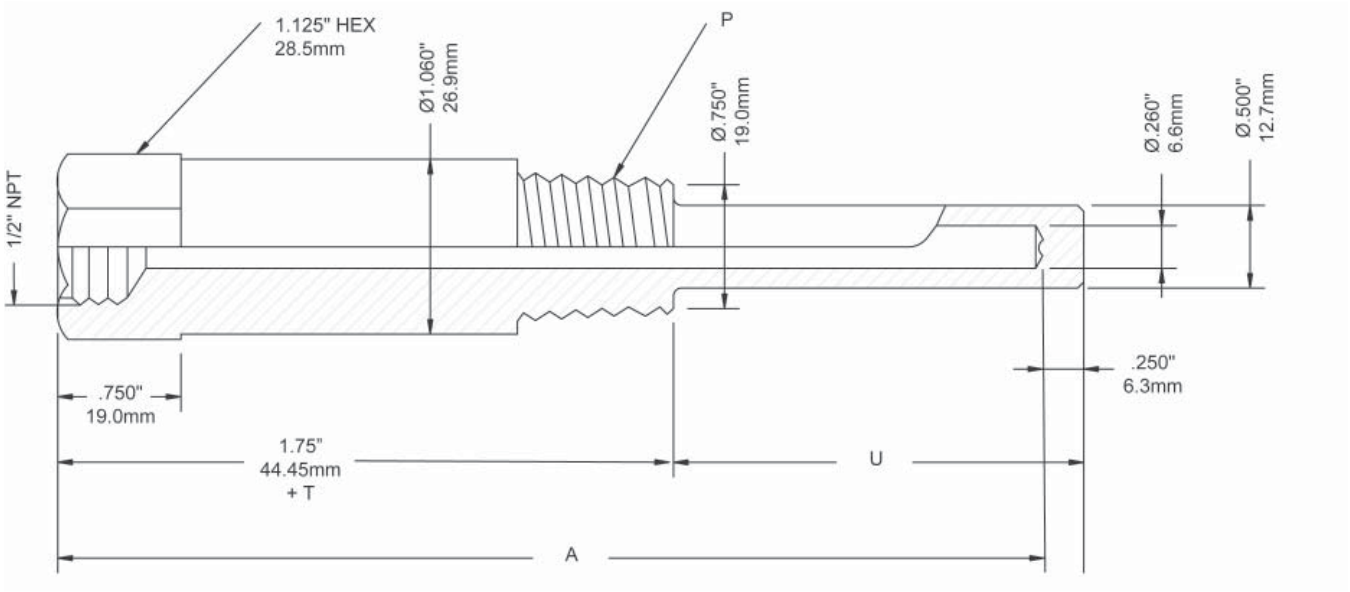

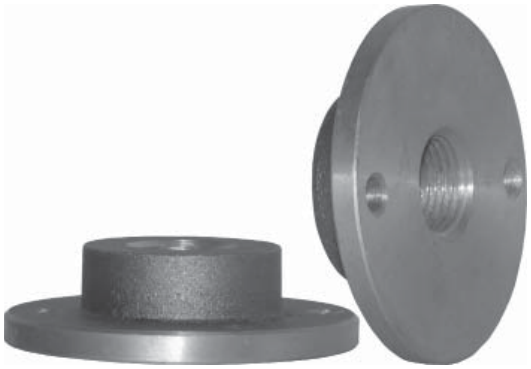

Description & Features:

- Ideal for ventilation installations
- Lightweight aluminum construction for durable mounting
- Instrument connections available for both TIM and TBM thermometers
- 304 SS and 316 SS options available
- 5 year warranty

Applications:

- Specially designed for heating and air conditioning ventilation systems in residential and commercial buildings and industrial plants

Specifications	
Material	Aluminum
Thermometer Connection	1-1/4”-18 UNEF or 1/2” NPTF

Order Codes

Thermometer	Thermometer Connection	Thermometer	Code
TIM Series	1-1/4”-18 UNEF	2 hole	TDF100
TBM Series	1/2” NPT		TDF200

3 or 4 hole options available.

TDF100

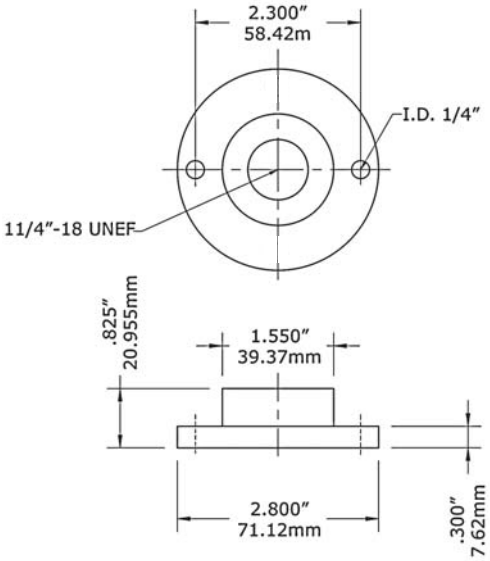

TDF200

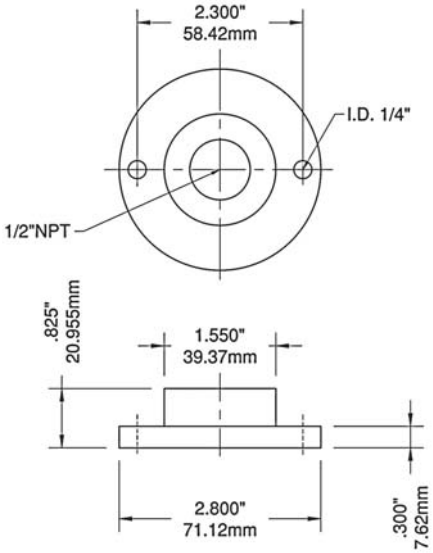

TIW, TIW-LF

Industrial Thermowell, Lead Free Industrial Thermowell

Description & Features:

- Designed for use with all 9" (230mm) industrial thermometers to create a "sealed system"
- Allows the easy replacement of thermometers without the need to shut down or drain the system
- CAN/CGSB-14.4-M88 compliant
- CRN registered
- 5 year warranty

Applications:

- HVAC, pipes, chill water and hot water lines
- Lead free version for potable water systems

LEAD FREE

RoHS compliant

Note: RoHS applies only to 304 SS and 316 SS thermowells

Specifications	
Material	TIW: Brass, AISI 304 SS, AISI 316 SS TIW-LF: Lead free brass
Bore Diameter	7/16" tapered
Form	Stepped standard, straight available
Thermometer Connection	1-1/4" UNEF
Process Connection	3/4" NPTM standard
Warning (brass and lead free brass thermowells only)	⚠ **WARNING:** This product can expose you to chemicals including lead, which is known to the State of California to cause cancer and birth defects or other reproductive harm. For more information go to www.P65Warnings.ca.gov.

TIW Thermowell Order Codes (products in bold are normally stock in North America)

Stem Length	Overall Length	Material	Insertion Length	Lagging Extension	1/2" NPT Connection	3/4" NPT Connection
3.5" Without Lagging	4.25" (108mm)	Brass	2.5" (63mm)	-	-	TIW01
		304 SS			-	TIW01-1
		316 SS			-	TIW01-2
3.5" With Lagging	4.25" (108mm)	Brass	1.75" (44mm)	1" (25mm)	TIW02	TIW03
		304 SS			TIW02-1	TIW03-1
		316 SS			TIW02-2	TIW03-2
6" Without Lagging	6.75" (172mm)	Brass	5" (127mm)	-	-	TIW04
		304 SS			-	TIW04-1
		316 SS			-	TIW04-2
6" With Lagging	6.75" (172mm)	Brass	2.5" (63mm)	2.5" (63mm)	-	TIW07
		304 SS			-	TIW07-1
		316 SS			-	TIW07-2

TIW-LF Thermowell Order Codes (products in bold are normally stock in North America)

Stem Length	Overall Length	Material	Insertion Length	Lagging Extension	3/4" NPT Connection
3.5" Without Lagging	4.25" (108mm)	Lead Free Brass	2.5" (63mm)	-	TIW01LF
3.5" With Lagging		Lead Free Brass	1.75" (44mm)	1" (25mm)	TIW03LF
6" Without Lagging	6.75" (172mm)	Lead Free Brass	5" (127mm)	-	TIW04LF
6" With Lagging		Lead Free Brass	2.5" (63mm)	2.5" (63mm)	TIW07LF

Other configurations available. Other threads available upon request. Longer thermowells available upon request.
Other materials such as Monel®, Inconel®, Hastelloy® C and Titanium are available upon request.

Option suffix:
W61 = Brass cap and chain (1.25" UNEF)
W61-1 = SS cap and chain (1.25" UNEF)

Hastelloy® is a registered trademark of Haynes International, Inc.
Inconel® is a registered trademark of Special Metals Corporation
Monel® is a registered trademark of Inco Alloys International

3.5” Stem Without Lagging

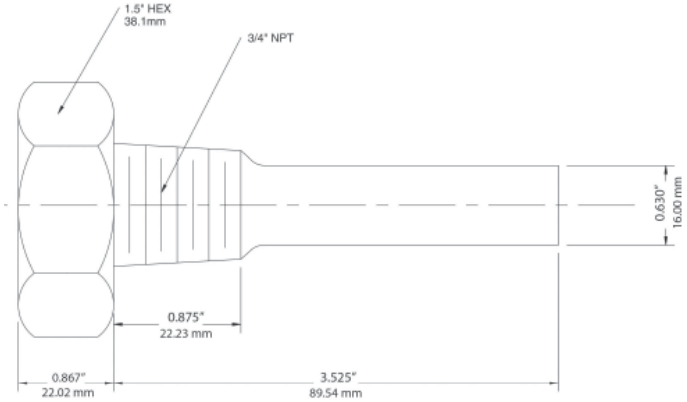

3.5” Stem With Lagging

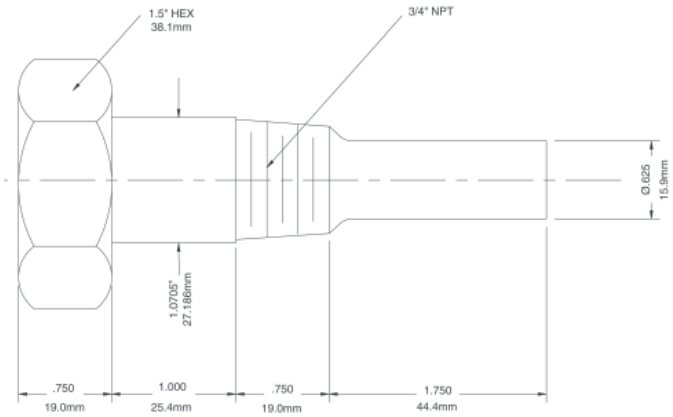

6” Stem Without Lagging

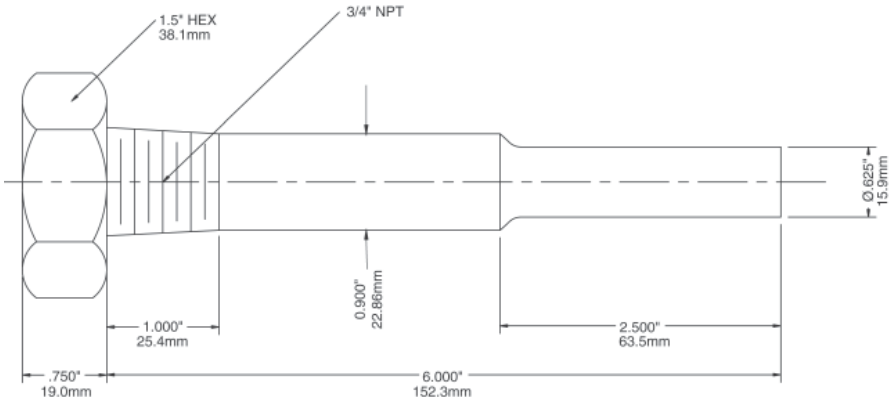

6” Stem With Lagging

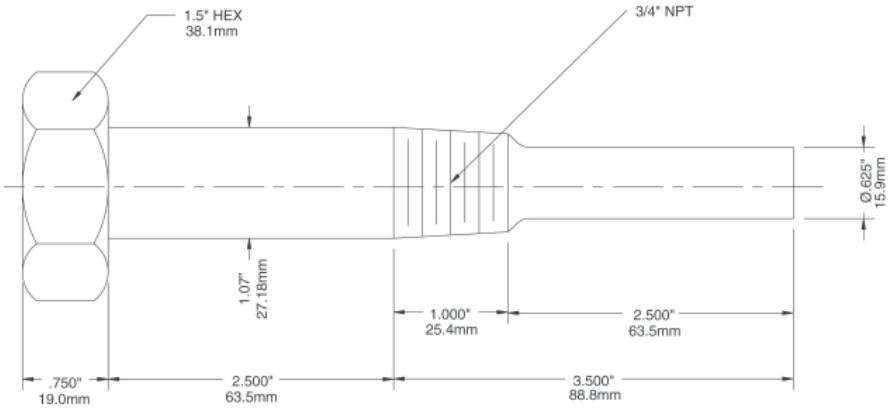

TSN Sanitary Thermowell

Description & Features:

- Allows for easy installation and replacement of bi-metallic dial thermometers without draining the process
- 3A approved
- 5 year warranty

Applications:

- Designed specifically for the sanitary requirements of the food and dairy industries

Specifications	
Material	316 SS
Connection	1.5” (40mm) or 2” (50mm) Tri-Clamp®
Thermometer Connection	1/2” NPT
Bore	0.260” (6.6mm) standard
Other	Lengths fit all standard bi-metal thermometers

Order Codes

Tri-Clamp®	Stem Length	U Dimensions	Code
1.5” (40mm)	2.5” (63mm)	1.5” (40mm)	TSN15SANI2
	4” (100mm)	3” (75mm)	TSN15SANI4
	6” (150mm)	5” (125mm)	TSN15SANI6
	9” (225mm)	8” (200mm)	TSN15SANI9
2” (50mm)	2.5” (63mm)	1.5” (40mm)	TSN2SANI2
	4” (100mm)	3” (75mm)	TSN2SANI4
	6” (150mm)	5” (125mm)	TSN2SANI6
	9” (225mm)	8” (200mm)	TSN2SANI9

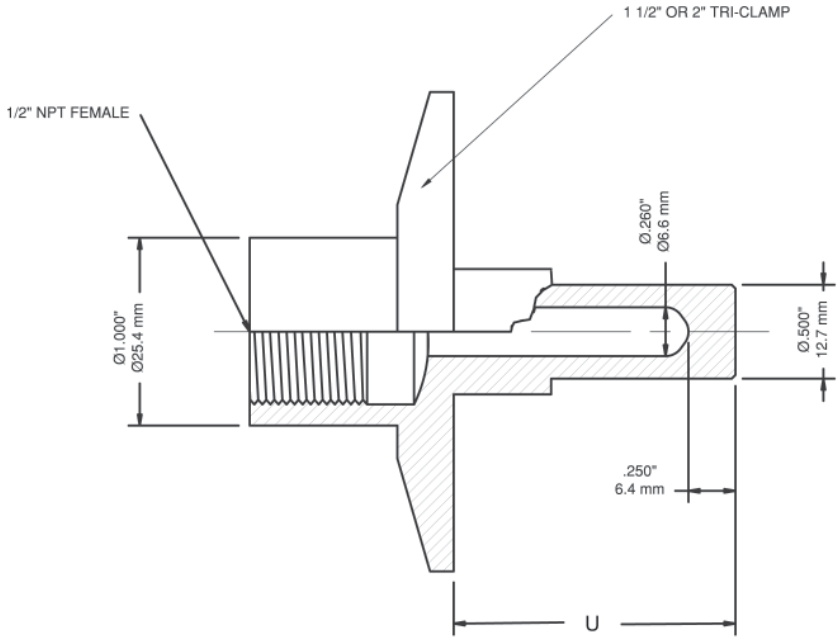

Tri-Clamp® is a registered trademark of Tri-Clover

Description & Features:

- Spring loaded allowing TST to stay open when tridicator is installed. Once tridicator is removed thermowell closes preventing media from exiting the system
- Minimizes system downtime with quick instrument replacement
- CRN registered
- Up to 250 psi pressure rating (matching TTD Tridicator)
- 5 year warranty

Applications:

- Boilers and hydronic heating systems

Specifications	
Material	Brass
Tridicator Connection	1/4” or 1/2” NPTM standard
Warning	⚠ **WARNING:** This product can expose you to chemicals including lead, which is known to the State of California to cause cancer and birth defects or other reproductive harm. For more information go to www.P65Warnings.ca.gov.

Order Codes (products in bold are normally stock in North America)

Stem Length	Maximum Extension (X)	Instrument & Pipe NPT Connection	Code
1.92” (48.8mm)	1.3" (33.8mm)	1/4”	TST025
2.65” (67.3mm)	1.6" (41.5mm)	1/2”	TST050

1/4” TST025

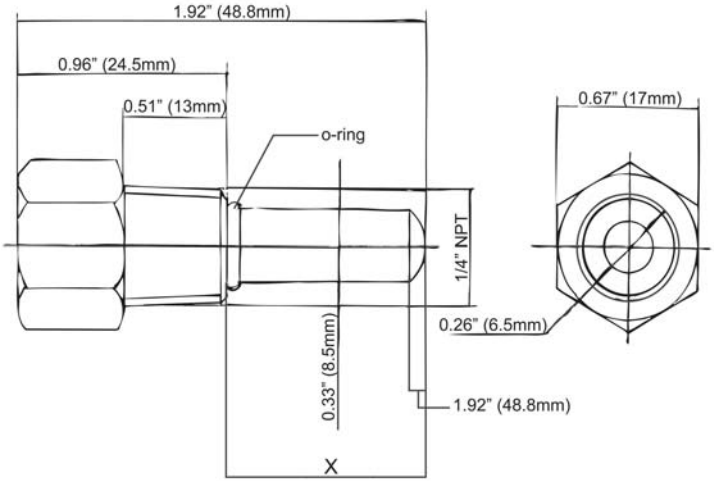

1/2” TST050

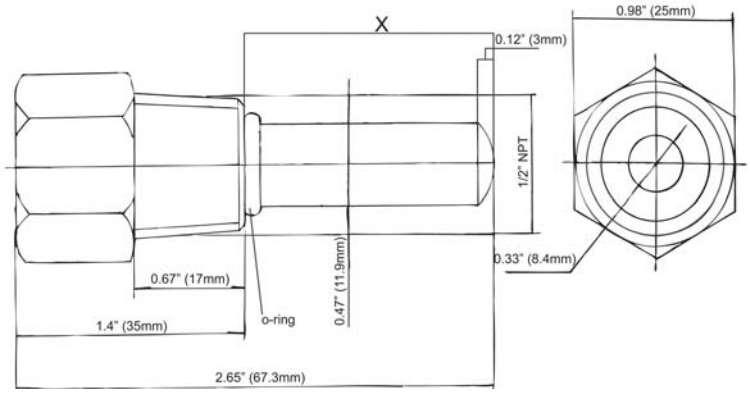

Flanged Bi-Metal Thermowell

Description & Features:

- Designed for use on a closed system
- 5 year warranty

Applications:

- Isolates temperature sensor from process media

Order Codes

Element Length	U Dimension	Material	Flange Size and Rating 150# Code		
			1” (25mm)	1.5” (40mm)	2” (50mm)
4” (100mm) stem	2” (50mm)	304 SS	TWF11504304	TWF151504304	TWF21504304
		316 SS	TWF11504316	TWF151504316	TWF21504316
6” (150mm) stem	4” (100mm)	304 SS	TWF11506304	TWF151506304	TWF21506304
		316 SS	TWF11506316	TWF151506316	TWF21506316
9” (225mm) stem	7” (178mm)	304 SS	TWF11509304	TWF151509304	TWF21509304
		316 SS	TWF11509316	TWF151509316	TWF21509316
12” (300mm) stem	10” (254mm)	304 SS	TWF115012304	TWF1515012304	TWF215012304
		316 SS	TWF115012316	TWF1515012316	TWF215012316
15” (370mm) stem	13” (330mm)	304 SS	TWF115015304	TWF1515015304	TWF215015304
		316 SS	TWF115015316	TWF1515015316	TWF215015316

Element Length	U Dimension	Material	Flange Size and Rating 300# Code		
			1” (25mm)	1.5” (40mm)	2” (50mm)
4” (100mm) stem	2” (50mm)	304 SS	TWF13004304	TWF153004304	TWF23004304
		316 SS	TWF13004316	TWF153004316	TWF23004316
6” (150mm) stem	4” (100mm)	304 SS	TWF13006304	TWF153006304	TWF23006304
		316 SS	TWF13006316	TWF153006316	TWF23006316
9” (225mm) stem	7” (178mm)	304 SS	TWF13009304	TWF153009304	TWF23009304
		316 SS	TWF13009316	TWF153009316	TWF23009316
12” (300mm) stem	10” (254mm)	304 SS	TWF130012304	TWF1530012304	TWF230012304
		316 SS	TWF130012316	TWF1530012316	TWF230012316
15” (370mm) stem	13” (330mm)	304 SS	TWF130015304	TWF1530015304	TWF230015304
		316 SS	TWF130015316	TWF1530015316	TWF230015316

Other configurations available.

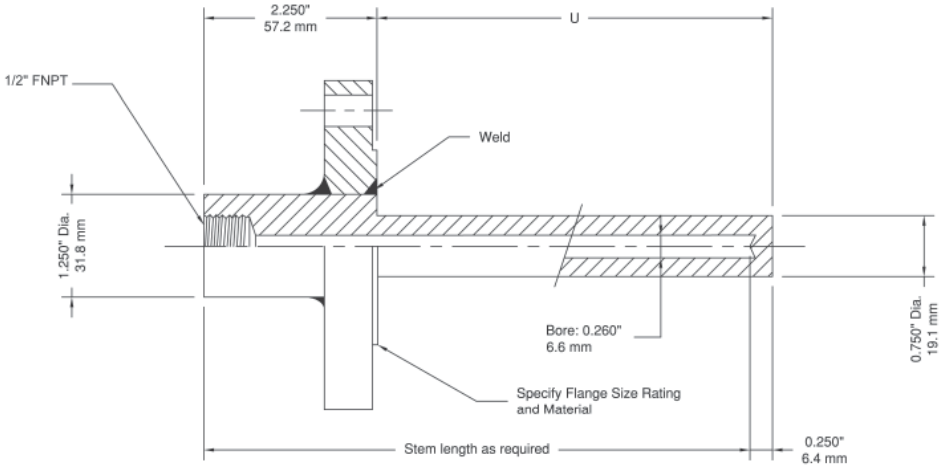

Description & Features:

- Designed to be welded in place within the system
- Economical
- 5 year warranty

Applications:

- Tanks or feed water system on boilers where no internal threads are available

Specifications	
Material	304 or 316 SS
Thermometer Connection	1/2” NPT
Bore	0.260” (6.5mm) standard

Order Codes

Stem Length	Pipe Diameter	Dimension P	Dimension Q	Dimension U	Material	Code
4” (100mm)	3/4”	1.05” (27mm)	1/2” (12.5mm)	2.5” (63mm)	304 SS	TWS754304
					316 SS	TWS754316
	1”	1.315” (33mm)	7/8” (22mm)		304 SS	TWS14304
					316 SS	TWS14316
6” (150mm)	3/4”	1.05” (27mm)	3/4” (19mm)	4.5” (115mm)	304 SS	TWS756304
					316 SS	TWS756316
	1”	1.315” (33mm)	7/8” (22mm)		304 SS	TWS16304
					316 SS	TWS16316
9” (230mm)	3/4”	1.05” (27mm)	3/4” (19mm)	7.5” (191mm)	304 SS	TWS759304
					316 SS	TWS759316
	1”	1.315” (33mm)	7/8” (22mm)		304 SS	TWS19304
					316 SS	TWS19316
12” (300mm)	3/4”	1.05” (27mm)	3/4” (19mm)	10.5” (267mm)	304 SS	TWS7512304
					316 SS	TWS7512316
	1”	1.315” (33mm)	7/8” (22mm)		304 SS	TWS112304
					316 SS	TWS112316

Other configurations available.

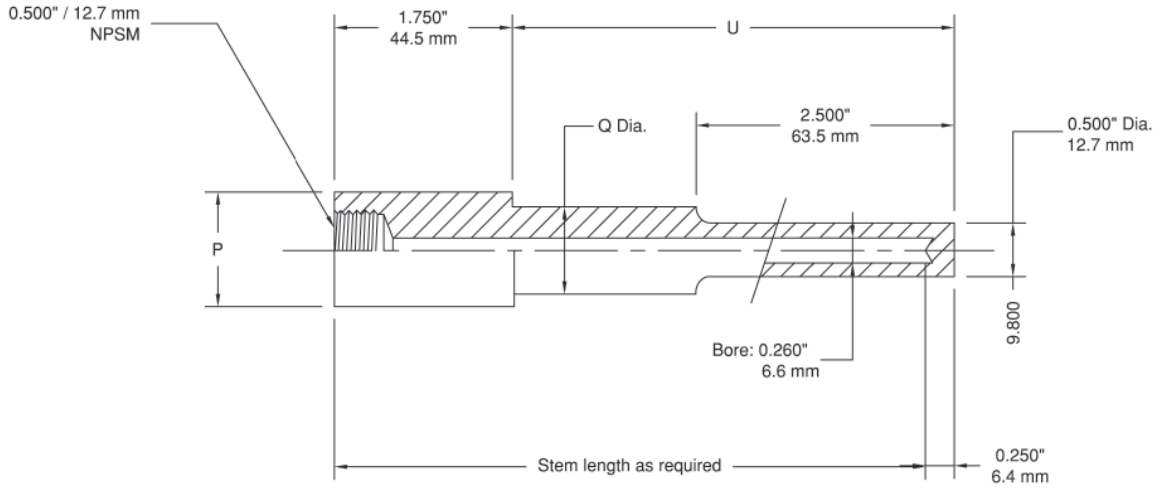

TWW Weld-In Threaded Thermowell

Description & Features:

- Utilized where a welded thermowell is required
- 5 year warranty

Applications:

- Where high pressure or high flow of media is present (i.e. pipes)

Specifications	
Material	304 or 316 SS
Thermometer Connection	1/2” NPT
Bore	0.260” (6.5mm) Standard
Other	1.5” Connection pipe size standard

Order Codes

Stem Length A	Pipe Diameter	Dimension P	Dimension U	Material	Code
4” (100mm)	3/4”	1.5” (40mm)	2.5” (63mm)	304 SS	TWW154304
				316 SS	TWW154316
6” (150mm)			4.5” (115mm)	304 SS	TWW156304
				316 SS	TWW156316
9” (230mm)			7.5” (191mm)	304 SS	TWW159304
				316 SS	TWW159316
12” (300mm)			10.5” (267mm)	304 SS	TWW1512304
				316 SS	TWW1512316

Other configurations available. Cap and chain supplied as an option. Thermowells for 1” pipe available. 0.385” bores available.

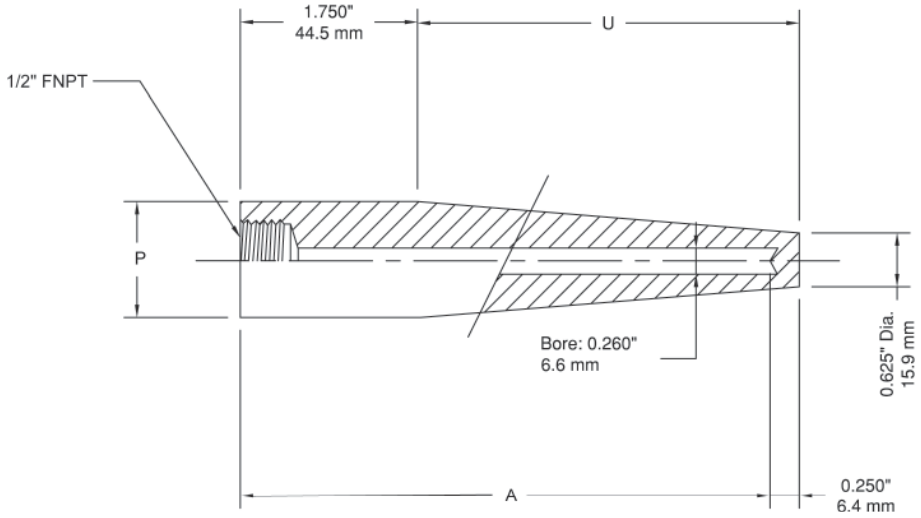

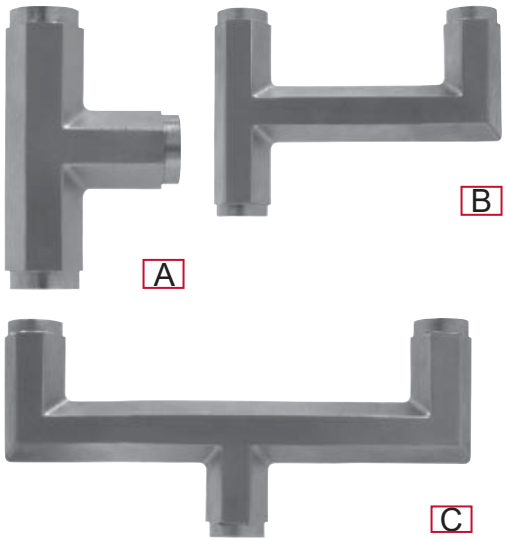

Description & Features:

- Robust tees for isolation ring assembly
- 316 SS construction with 1/4” or 1/2” NPTF instrument connections and a 1/2” NPTF process connection
- Ideal for installing pressure gauges with other instruments for full functionality

Applications:

- Water treatment facilities and other slurry environments where isolation rings are installed and more than one pressure instrument is required (eg. pressure gauge with pressure switch or transmitter)

Specifications	
Material	316 SS
Connections	2 instrument, 1 process
Instrument Connections	1/4” or 1/2” NPTF
Process Connection	1/2” NPTF

Order Codes

Type	1/4”	1/2”
A	FIR0014	FIR0010
B	FIR0024	FIR0020
C	FIR0034	FIR0030

Type A

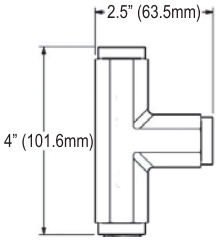

Type B

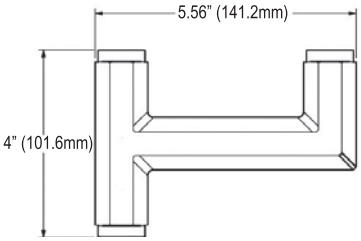

Type C

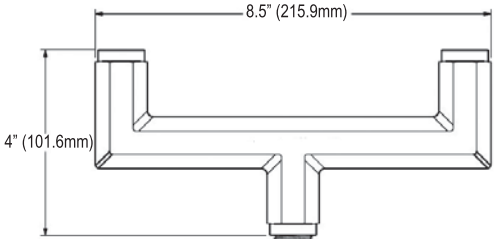

SAS Adjustable Snubber

Description & Features:

- Prolongs the life of pressure instruments by reducing the damaging effects of pulsation
- ASME B40.100 compliant
- CRN registered
- 5 year warranty

Applications:

- Can be utilized to change the amount of restriction
- Pumps, compressors, hydraulic presses or fluid power applications

RoHS compliant

Note: RoHS only applies to SS adjustable snubber

Specifications	
Body	Brass or SS
Connection	1/4” or 1/2” NPTM x NPTF
Temperature Range	-40°F to 248°F (-40°C to 120°C)
Warning (brass internals only)	⚠ **WARNING:** This product can expose you to chemicals including lead, which is known to the State of California to cause cancer and birth defects or other reproductive harm. For more information go to www.P65Warnings.ca.gov.

Order Codes

Pressure Rating	Material / NPT Connection	Seal	Code
6,000 psi	Brass 1/4” MxF	PTFE	SAS540
	Brass 1/2” MxF		SAS541
	SS 1/4” MxF		SAS542
10,000 psi	SS 1/2” MxF		SAS543

Description	SS	Brass
Gland Seal	PTFE	
Stem	316 SS	
Gland	316 SS	Brass
Gland Washer	316 SS	
Body	316 SS	Brass

Caution: When adjusting the valve, do not adjust more than two turns from the closed position as leakage will occur.

1/4” NPT

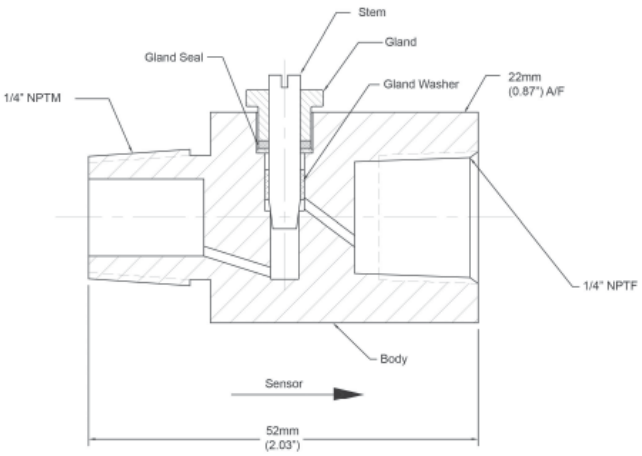

1/2” NPT

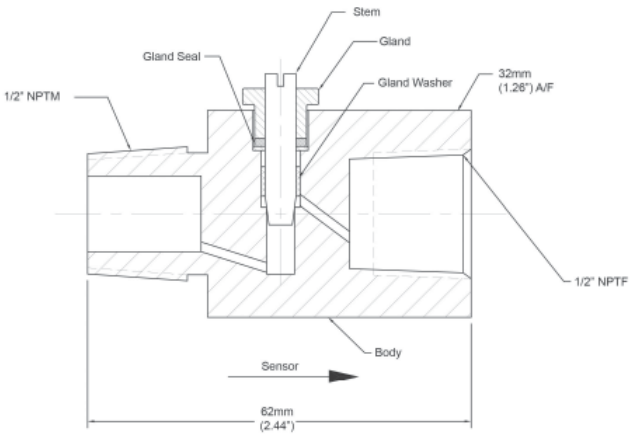

Accessories

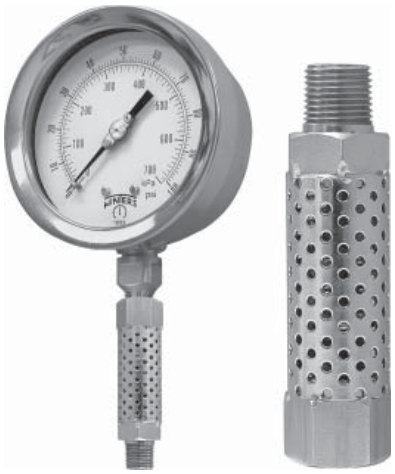

Description & Features:

- Perforated case c/w spiral tubing protects pressure gauges, switches and transmitters. Used where the process media temperature exceeds the rating of the instrument
- For process media temperatures up to 570°F. Can reduce the media temperature by as much as 500°F*
- CRN registered
- 5 year warranty

Applications:

- Clean (no particulate) media, gases
- When used with a diaphragm seal, the pressure rating of the diaphragm seal must be acknowledged
- Extreme high temperature installations
- Used in oil & gas installations, chemical processing and mining

Note: Pressure gauge sold separately

Specifications	
Socket	316 L SS
Tube	316 SS
Maximum Operating Pressure	1,500 psi
Maximum Process Temperature	570°F (300°C) or 932°F (500°C)
Connection	1/4” NPTM x 1/4” NPTF 1/2” NPTM x 1/2” NPTF

Order Codes (products in bold are normally stock in North America)

Maximum Process Temperature	1/4” NPTM x 1/4” NPTF	1/2” NPTM x 1/2” NPTF
570°F (300°C)	SCT-400	SCT-500
932°F (500°C)	SCT-600	SCT-700

Other connections available upon request

SCT-400
1/4” NPTM x 1/4” NPTF

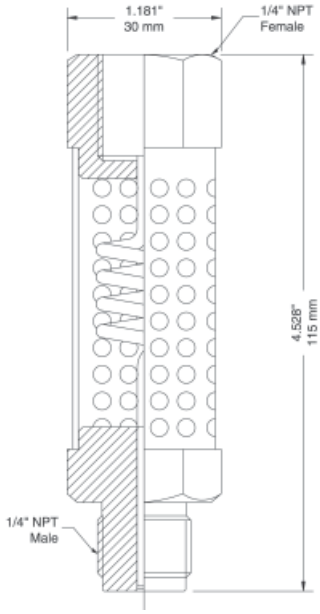

SCT-500
1/2” NPTM x 1/2” NPTF

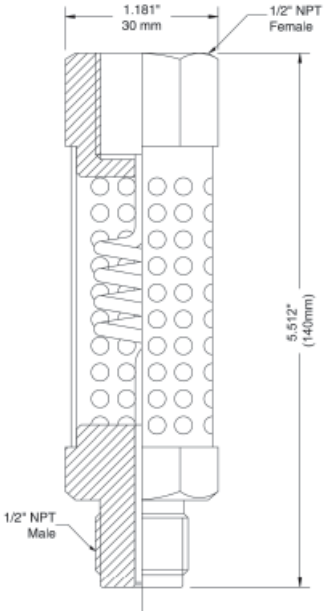

*Degree of cooling is dependent on ambient conditions

SOP Over Pressure Protector

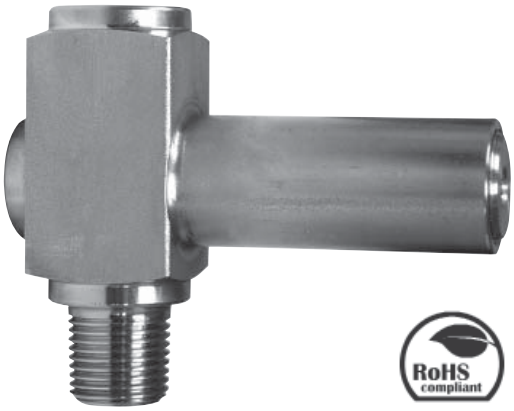

Description & Features:

- Setpoint adjustments are made by manipulating an external adjusting screw and lock nut
- Automatically shuts off pressure to the instrument once the adjustable preset pressure is exceeded
- CRN registered
- 5 year warranty

Applications:

- Utilized to protect pressure instruments against surges and pulsation
- Available in Bellows and Piston Type

Specifications	
Body	Bellows Type: 316 SS Piston Type: 316 SS
Gasket	FKM
Maximum Operating Pressure	10,000 psi
Temperature Rating	-40°F to 248°F (-40°C to 120°C)
Connection	1/4” NPTM x 1/4” NPTF or 1/2” NPTM x 1/2” NPTF

Order Codes

Bellows Type				
Adjustable Pressure Range	Connection NPT			
	1/4” x 1/4”	1/2” x 1/2”	1/4” x 1/4” NACE	1/2” X 1/2” NACE
2.9 to 14.5 psi	SOP32025	SOP32050	SOP32025N	SOP32050N
14.5 to 58 psi	SOP159025	SOP159050	SOP159025N	SOP159050N
58 to 145 psi	SOP9023025	SOP9023050	SOP9023025N	SOP9023050N
Piston Type				
Adjustable Pressure Range	Connection NPT			
	1/4” x 1/4”	1/2” x 1/2”	1/4” x 1/4” NACE	1/2” x 1/2” NACE
145 to 580 psi	SOP14039525	SOP14039550	SOP14039525N	SOP14039550N
580 to 2,330 psi	SOP435116025	SOP435116050	SOP435116025N	SOP435116050N
2,320 to 5,800 psi	SOP1450580025	SOP1450580050	SOP1450580025N	SOP1450580050N

1/4” x 1/4”

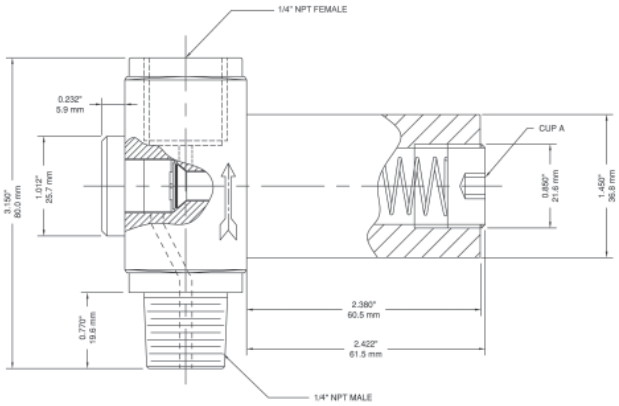

1/2” x 1/2”

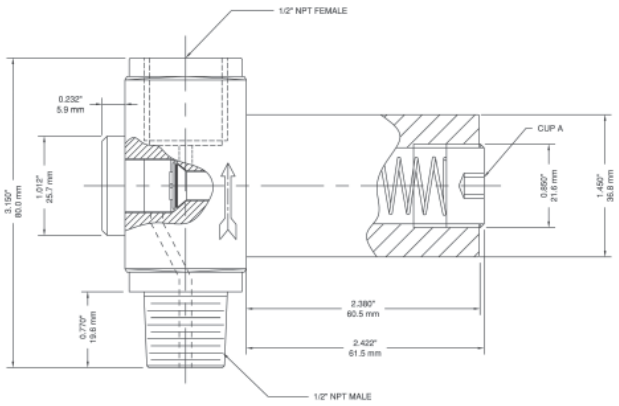

Description & Features:

- Incorporates a sintered, porous 316 stainless steel snubbing element with a large surface area to ensure long term effectiveness
- Available in the three standard viscosity classifications of heavy oil, water and air
- Brass, lead free brass or stainless steel housings can be specified depending upon pressure media and operating pressure
- ASME B40.100 compliant
- CRN registered
- 5 year warranty

Applications:

- To significantly lessen the damaging effects of pulsation on gauges, transducers, transmitters, manometers and pressure switches
- Lead free version for potable water systems

LEAD FREE

RoHS compliant

Note: RoHS applies only to 316 SS version

Specifications	SS	Brass
Operating Temperature	-320°F to 1,500°F (-195°C to 815°C)	-65°F to 650°F (-53°C to 343°C)
Operating Pressure	Maximum 20,000 psi (137,900 kPa)	Maximum 10,000 psi (68,950 kPa)
Burst Pressure	60,000 psi (413,700 kPa)	30,000 psi (206,850 kPa)
Housing	316 SS	SSN: Brass SSN-LF: Lead free brass
Snubbing Element	Sintered, porous type 316 SS	Sintered, porous type 316 SS
Retainer	300 series SS	300 series SS
Warning (brass internals only)	N/A	**WARNING:** This product can expose you to chemicals including lead, which is known to the State of California to cause cancer and birth defects or other reproductive harm. For more information go to www.P65Warnings.ca.gov.

SSN Order Codes (products in bold are normally stock in North America)

Model	Heavy Oil	Water	Air
1/4" Brass	SSN517	SSN515	SSN516
1/4" SS	SSN520	SSN518	SSN519
1/2" Brass	SSN514	SSN512	SSN513
1/2" SS	SSN531	SSN529	SSN530

SSN-LF Order Codes (products in bold are normally stock in North America)

Model	Water
1/4" Brass	SSN515LF
1/2" Brass	SSN512LF

1/4" Snubber

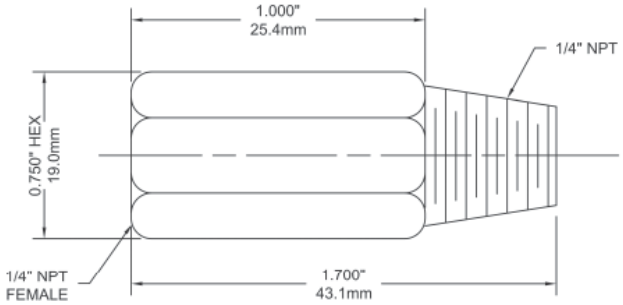

1/2" Snubber

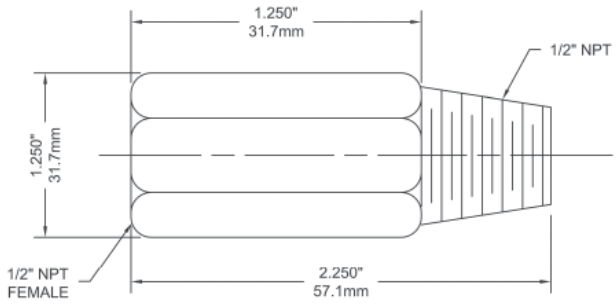

Note: RoHS applies only to 304 SS and 316 SS syphons

Description & Features:

- On steam service, the syphon will prevent hot steam from entering a pressure gauge, diaphragm seal or transmitter
- Available in brass/steel for non-corrosive applications and stainless steel for corrosive applications
- CRN registered
- 5 year warranty

Applications:

- Recommended for applications involving temperatures above 100°F (37°C)
- Ideal for steam installations

Specifications	
Material	Schedule 40 brass, schedule 40, 80 carbon steel, 304 SS or 316 SS (all types seamless)
Style	180° coil
Connection	1/4” NPTM x 1/4” NPTM or 1/2” NPTM x 1/2” NPTM
Maximum Operating Pressure	Schedule 40: Brass, carbon steel, 304 SS, 316 SS suitable up to 500 psi at 680°F (360°C) Schedule 80: Carbon steel, 304 SS, 316 SS suitable up to 1,650 psi at 630°F (332°C)
Warning (brass syphons only)	**WARNING:** This product can expose you to chemicals including lead, which is known to the State of California to cause cancer and birth defects or other reproductive harm. For more information go to www.P65Warnings.ca.gov.

Order Codes (products in bold are normally stock in North America)

Material	1/4” NPT	1/2” NPT
Schedule 40 Brass	SSP545	SSP559
Schedule 40 Carbon Steel	SSP525	SSP555
Schedule 40 304 SS	SSP535	SSP585
Schedule 40 316 SS	SSP554	SSP557
Schedule 80 Carbon Steel	SSP556	SSP2715
Schedule 80 304 SS	SSP595	SSP2716
Schedule 80 316 SS	-	SSP2719

Note: Schedule 80 316 SS and extra-extra strong schedule available

1/4” Syphon

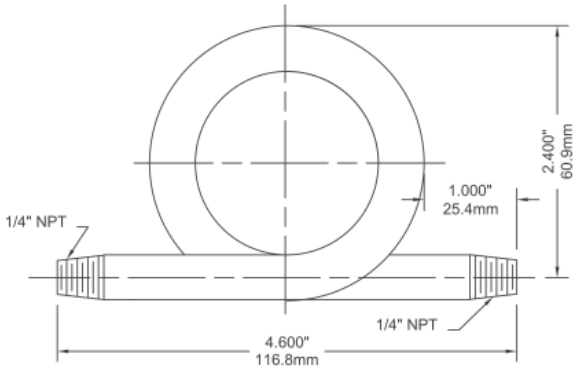

1/2” Syphon

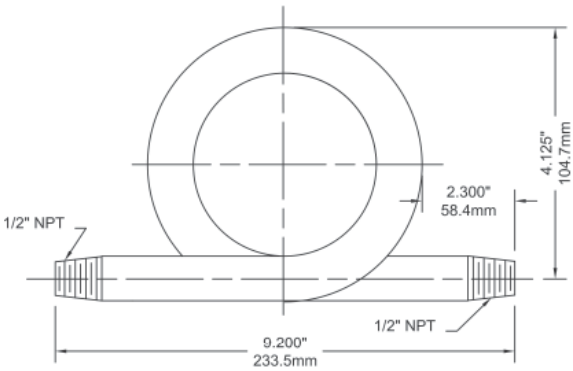

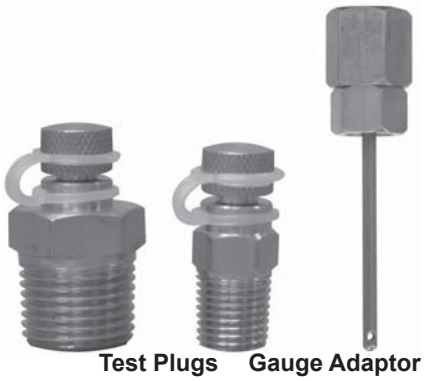

Test Plugs Gauge Adaptor Plug

Description & Features:

- Facilitates quick pressure and temperature readings at recommended test points within process
- Test plugs are available in brass or lead free brass wetted parts
- Gauge adapters ship with protective aluminum sleeve
- ASME B1.20.1 compliant
- CRN registered
- 5 year warranty

Applications:

- Mainly used in plumbing, heating, ventilation and air conditioning installations
- Lead free version for potable water systems

Specifications	
Body	STP: Brass STP-LF: Lead free brass
Diaphragm/Core	NBR (Buna N)
Temperature Rating	-40°F to 302°F (-40°C to 150°C)
Maximum Pressure Rating	1,000 psi (6,895 kPa)
Connection	1/4” NPT or 1/2” NPT
Warning	**WARNING:** This product can expose you to chemicals including lead, which is known to the State of California to cause cancer and birth defects or other reproductive harm. For more information go to www.P65Warnings.ca.gov.

STP Order Codes (products in bold are normally stock in North America)

Brass Test Plug	
1/4” NPTM	STP001
1/2” NPTM	STP002

Gauge Adaptor	
2.75 OAL x 1.75” x 0.125” probe	STP003
2.25 OAL x 1.75” x 0.125” probe	STP004

STP-LF Order Codes (products in bold are normally stock in North America)

Lead Free Brass Test Plug	
1/4” NPTM	STP001LF
1/2” NPTM	STP002LF

Other sizes and materials available upon request.

1/4” Test Plug

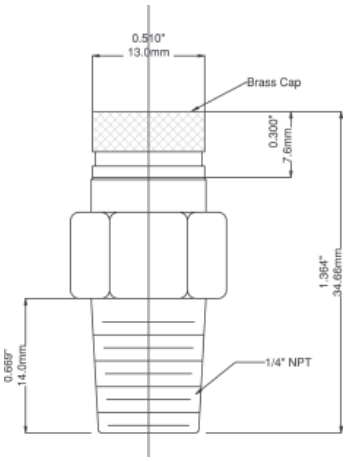

1/2” Test Plug

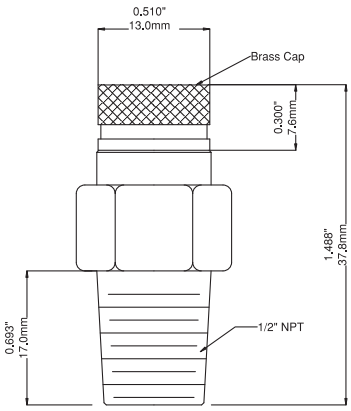

Gauge Adaptor 2.25”

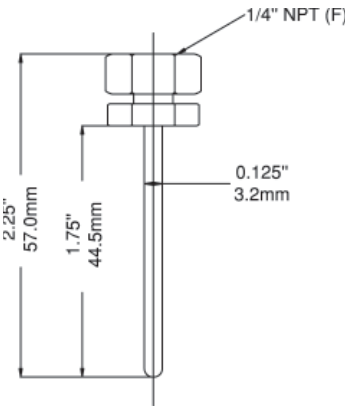

Gauge Adaptor 2.75”

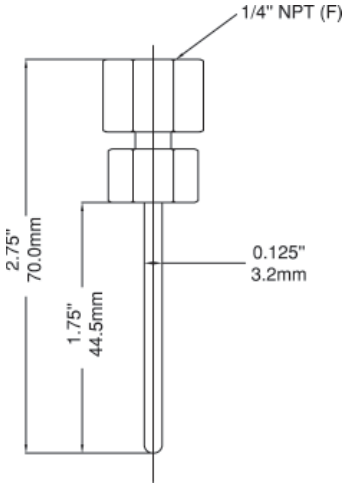

Winters Approvals / Certifying Agencies

3A

The objective of the 3A Sanitary Standards Committee is to formulate standards and accepted practices for equipment and systems used to process milk and milk products. Such standards are developed through all levels of sanitarians, equipment manufacturers and equipment users so those standards are acceptable to those involved in the sanitary aspects of dairy and related industries. The 3A Symbol Administrative Council authorizes manufacturers to display the 3A symbol on processing equipment that is in compliance with 3A Sanitary Standards.

CSA

The Canadian Standards Association (CSA) includes Canadian consumers, manufacturers, labour, government, and other regulatory agencies among its actively participating influences. The various groups work together to generate standard requirements (CSA standards) that demonstrate product quality, enhance market acceptability and improve quality and safety control procedures in manufacturing and construction for the Canadian marketplace. The standards generated by CSA are the cornerstones for determining a product's eligibility for certification in hazardous locations in Canada. CSA also performs product evaluation, testing and ongoing inspection to these standards and also to American and European standards through new inter-laboratory agreements.

CE

Having a CE marking is a declaration that Winters' product conforms to a specific Directive adopted by the EEA (European Economic Area), and is a requirement if the product is to be sold into any of the countries in this 18 member group. CE is an abbreviation for the "Conformité Européenne", meaning European Conformance. Unlike dangerous location approvals, CE markings are granted to products that conform to Directives which were developed using IEC and Cenelec standards. The Directives that affect transmitters are the EMC (Electromagnetic Compatibility) and LVD (Low Voltage) Directives. These state that the products must meet specific electromagnetic emission and immunity, as well as electrostatic discharge standards.

CRN

A Canadian Registration Number (CRN) is a number issued by each province or territory of Canada to the design of a pressure vessel or fitting. The CRN identifies the design has been accepted and registered for use in that province or territory. The CRN is assigned to any pressure vessel or fitting built to a registered design.

FM

FM Approvals is an international leader in third-party testing and certification services. They test property loss prevention products and services—for use in commercial and industrial facilities—to verify they meet rigorous loss prevention standards of quality, technical integrity and performance. How? By employing a worldwide certification process that's backed by scientific research and testing, and over a century of experience.

The FM APPROVED mark is recognized and respected worldwide. Their certification instills confidence and commands respect in the marketplace.

ISO

ISO 9001

Winters is an ISO 9001 registered corporation. ISO 9001 requires an organization to demonstrate its ability to consistently provide products that meet customer and regulatory requirements, and enhance customer satisfaction through effective application of the system, including processes for continual improvement of the system and the assurance of conformity.

UL/ULC

Underwriters Laboratories and Underwriters Laboratories of Canada maintain a high commitment to public safety and dedication to exceed customer expectations through continual improvement in the delivery of quality services. The organizations develop and publish standards, classifications and specifications for products having a bearing on fire, accident or property hazards. If a product carries the UL mark, it means that UL found the product meeting UL's safety requirements. These requirements are based primarily on UL's own published Standards for Safety.

NACE

NACE

The National Association of Corrosion Engineers recommends practices such as methods of selection, design, installation, maintenance or operation of material or systems where corrosion is a factor. Some recommended practices focus on details of construction of a corrosion control system, methods of treating the surface of materials to reduce corrosion, requirements for using devices to reduce corrosion, and procedures for increasing the effectiveness, safety and economic benefits of an installation or system.

NSF

NSF

Manufacturers, regulators and consumers look to NSF International for the development of public health standards and certification programs that help protect the world's food, water, consumer products and environment. Their mission is to protect and improve global human health. As an independent, accredited organization, NSF's standards group facilitates the development of standards, and their service groups test and certify products and systems. They also provide auditing and risk management solutions for public health and the environment.

Founded in 1944 as the National Sanitation Foundation, they changed their name to NSF International in 1990 as they expanded their services beyond sanitation and into global markets.

RoHS

The Restriction of Hazardous Substances Directive restricts the use of six hazardous materials in the manufacturing of electronic and electrical equipment. These materials are: lead, mercury, cadmium, hexavalent chromium, polybrominated biphenyls and polybrominated diphenyl ether. Bring "RoHS compliant" is commonly interpreted as bring "lead-free", or having under 0.1% of lead in the material.

Ingress Protection (IP) Ratings

The **IP** Code indicates the **degree of protection** provided by enclosures for electrical equipment (i.e. IP65 = No dust entry and protected against low pressure jet of water).

The first numeral indicates protection of persons against access to dangerous parts and protection of internal equipment against the ingress of solid foreign objects.

- **X** Protection unspecified (untested)
- **0** No special protection provided
- **1** Protection of hand against accidental access to dangerous parts, and protection of equipment against objects larger than 50mm
- **2** Protection of fingers against access to dangerous parts, and protection of equipment against objects larger than 12mm
- **3** Protection against objects larger than 2.5mm (e.g. tools, wires)
- **4** Protection against objects larger than 1mm (e.g. line tools, wires)
- **5** Protection against entry of dust in sufficient quantity to interfere with satisfactory operation of equipment
- **6** Complete protection against entry of dust

The second numeral indicates protection of internal equipment against harmful ingress of water.

- **X** Protection unspecified (untested)
- **0** No special protection provided
- **1** Protection against drops of water falling vertically
- **2** Protection against drops of water falling vertically when the object is tilted by up to 15 degrees from its normal position (in any direction)
- **3** Protection against spraying water at up to 60 degrees from the vertical
- **4** Protection against splashing and spraying water from all practicable directions
- **5** Protection against a low pressure jet of water from all practicable directions
- **6** Protection against heavy seas or a strong jet of water from all practicable directions
- **6D** Protection against driving rain at angles down to horizontal
- **7** Protection against immersion
- **8** Protection against submersion (tests subject to agreement, but no less severe than numeral 7)

Pressure Switch Reference

Hazardous Location Definitions

Class I	Locations in which flammable gases or vapours are or may be present in the air in quantities sufficient to produce explosive or ignitable mixtures.
Class II	Locations which are hazardous because of the presence of combustible dust.
Class III	Locations which are hazardous because of the presence of easily ignitable fibers or flyings, but in which such fibers or flyings are not likely to be suspended in air in quantities sufficient to produce ignitable mixtures.
Division 1	Locations in which hazardous concentrations in the air exist continuously, intermittently, or periodically under normal operating conditions.
Division 2	Locations in which hazardous materials are handled, processed, or used, but where such materials are normally within closed containers or closed systems from which they can escape only in case of accidental rupture or breakdown.
Group A	Atmospheres containing acetylene.
Group B	Atmospheres containing hydrogen, or gases or vapours of equivalent hazard, such as manufactured gas.
Group C	Atmospheres containing ethyl-ether vapours, ethylene, or cyclo-propane.
Group D	Atmospheres containing gasoline, hexane, naphtha, benzine, butane, propane, alcohol, benzol, lacquer solvent vapours, or natural gas.
Group E	Atmospheres containing metal dust, including aluminum, magnesium and their commercial alloys and other metals of similar hazardous characteristics.
Group F	Atmospheres containing carbon black, coal or coke dust.
Group G	Atmospheres containing flour, starch or grain dust.

Hazardous Location Definitions - International

The International Electrotechnical Commission (IEC) classifies hazardous locations by Zone and Group. Zone is similar to the term “Division” in that it defines the likelihood of hazard:

Zone 0	An area in which an explosive gas/air mixture is constantly present or present for long periods of time.
Zone 1	An area in which an explosive gas/air mixture is likely to occur during normal operation (Similar to Division 1).
Zone 2	An area in which an explosive/air mixture is not likely to occur but if so, only for short periods of time (Similar to Division 2).

NEMA Enclosure Ratings

Certain Winters products (i.e. pressure transmitters and pressure switches) can be classified per the National Electrical Manufacturer's Association Enclosure (NEMA) classifications. NEMA is a non-profit trade organization composed of manufacturers of electrical power apparatus. NEMA created voluntary standards for electrical enclosures. These classifications describe the environment in which the product can be used due to the protection the enclosure provides. ("Enclosure" includes electrical and mechanical connections and external adjustments). Among others, NEMA classifies enclosures based on the effects of external icing, corrosion and rusting, or contamination from oil and coolants.

Pressure switches, transmitters and other electronic products may also be classified according to the voluntary standards set by NEMA for electrical enclosures.

Type	Seal	Indoor/Outdoor	Description
1	General Purpose	Indoor	Protection against ingress of solid foreign objects (falling dirt)
2	Drip-proof	Indoor	Protection against ingress of solid foreign objects (falling dirt); and protection against ingress of water (dripping and light splashing)
3	Dust-tight/rain-tight	Outdoor	Protection against ingress of solid foreign objects (falling dirt and windblown dust); protection against ingress of water (rain, sleet, snow); and that will be undamaged by the external formation of ice on the enclosure
3R	Dust-tight/rain-tight	Outdoor	Protection against ingress of solid foreign objects (falling dirt); protection against ingress of water (rain, sleet, snow); and that will be undamaged by the external formation of ice on the enclosure
4	Water-tight/dust-tight	Indoor/Outdoor	Protection against ingress of solid foreign objects (falling dirt and windblown dust); protection against ingress of water (rain, sleet, snow, splashing water, and hose directed water); and that will be undamaged by the external formation of ice on the enclosure
4X	Water-tight/dust-tight	Indoor/Outdoor	Protection against ingress of solid foreign objects (windblown dust); protection against the ingress of water (rain, sleet, snow, splashing water, and hose directed water); protection against corrosion; and that will be undamaged by the external formation of ice on the enclosure
5	Dust-tight	Indoor	Protection against ingress of solid foreign objects (falling dirt and settling airborne dust, lint, fibers, and flyings); protection against ingress of water (dripping and light splashing)
6	Water-tight/dust-tight	Indoor/Outdoor	Protection against ingress of solid foreign objects (falling dirt); protection against ingress of water (hose directed water and the entry of water during occasional temporary submersion at a limited depth); and that will be undamaged by the external formation of ice on the enclosure
6P	Water-tight/dust-tight	Indoor/Outdoor	Protection against ingress of solid foreign objects (falling dirt); protection against ingress of water (hose directed water and the entry of water during prolonged submersion at a limited depth); that provides an additional level of protection against corrosion and that will be undamaged by the external formation of ice on the enclosure
7	Explosion proof/Class I Groups A, B, C, D	Indoor Hazardous	Enclosures constructed for indoor use in hazardous (classified) locations classified as Class I, Division 1, Groups A, B, C, or D as defined in NFPA 70
8	Explosion proof/Class I	Indoor/Outdoor	Enclosures constructed for either indoor or outdoor use in hazardous (classified) locations classified as Class I, Division 1, Groups A, B, C, and D as defined in NFPA 70
9	Explosion Proof/Class II Groups E or G	Indoor Hazardous	Enclosures constructed for indoor use in hazardous (classified) locations classified as Class II, Division 1, Groups E, F, or G as defined in NFPA 70
11	Oil-tight/Corrosion	Indoor	Protection from corrosive effects of gases and liquid dripping, seepage and external condensation or corrosive, oil immersion
12	Oil-tight/Dust-tight	Indoor	Protection against ingress of solid foreign objects (falling dirt and circulating dust, lint, fibers, and flyings); protection against ingress of water (dripping and light splashing)
13	Oil-tight/Dust-tight	Indoor	Protection against ingress of solid foreign objects (falling dirt and circulating dust, lint, fibers, and flyings); protection against ingress of water (dripping and light splashing); protection against the spraying, splashing, and seepage of oil and non-corrosive coolants

CRN (Canadian Registration Number)

The Canadian Registration Number (CRN) is a number issued by each province/territory in Canada to the design of boilers, pressure vessels or fittings. Industrial instrumentation such as pressure gauges, thermometers and related accessories all fall under this jurisdiction. The CRN identifies that the design has been accepted and registered for use in that province/territory. Please refer to the individual product pages to see if a series is CRN registered.

Prov.	Pressure Gauges	Diaphragm Seals	Thermowells	Mini Ball Valves	Needle Valves	Multiport and Block & Bleed Valves	Cooling Towers, Syphons, Snubbers and Test Plugs	Transmitters/ Switches	Over-pressure Protector
ON	0F6751.5ADD4	0F6751.5ADD4 0F6751.5ADD5	0F6751.5ADD4	0C6751.5R2	0C18567.5	0C19638.5	0F6751.5ADD4	0F17528.5 0F20906.5ADD1*	0F11487.5R1
QC	0F6751.56ADD4	0F6751.56ADD4 0F6751.56ADD5	0F6751.56ADD4	0C6751.56R2	0C18567.5	0C19638.56	0F6751.56ADD4	0F17528.56 0F20906.56ADD1*	0F11487.56R1
BC	0F6751.51ADD4	0F6751.51ADD4 0F6751.51ADD5	0F6751.51ADD4		0C18567.5	0C019638.51	0F6751.51ADD4	0F17528.51 0F20906.51*	0F11487.51
AB	0F06751.52	0F06751.52	0F06751.52	0C06751.52	0C18567.52	0C19638.52	0F06751.52	0F17528.52 0F209056.52*	0F11487.52
MB	0F6751.56ADD4	0F6751.56ADD4 0F6751.56ADD5	0F6751.56ADD4	0C6751.56R2	0C18567.5	Exempt	0F6751.56ADD4	0F17528.54 0F20906.54*	0F11487.54
SK	0F6751.56ADD4	0F6751.56ADD4 0F6751.56ADD5	0F6751.56ADD4	0C6751.56R2	0C18567.5	0C19638.56	0F6751.56ADD4	0F17528.56 0F20906.56ADD1*	0F11487.56R1
NB	0F6751.57ADD4	0F6751.57ADD4 0F6751.57ADD5	0F6751.57ADD4	0C6751.57REV2	0C18567.5	0C19638.57	0F6751.57ADD4	0F17528.57 0F20906.57ADD1*	0F11487.57R1
NS	0F6751.58ADD4	0F6751.58ADD4 0F6751.58ADD5	0F6751.58ADD4	0C6751.58REV2	0C18567.5	0C19638.58	0F6751.58ADD4	0F17528.58 0F20906.58ADD1*	0F11487.58R1
PE	0F6751.59ADD4	0F6751.59ADD4 0F6751.50ADD5	0F6751.59ADD4	0C6751.59REV2	0C18567.5	0C19638.59	0F6751.59ADD4	0F17528.59 0F20906.59ADD1*	0F11487.59R1
NL	0F6751.50ADD4	0F6751.50ADD4 0F6751.50ADD5	0F6751.50ADD4	0C6751.50REV2	0C18567.5	0C19638.50	0F6751.50ADD4	0F17528.50 0F20906.50ADD1*	0F11487.50R1
YT	0F6751.5YADD4	0F6751.5YADD4 0F6751.5YADD5	0F6751.5YADD4	0C6751.5YREV2	0C18567.5Y	0C19638.59870Y	0F6751.5YADD4	0F17528.5Y 0F20906.5YADD1*	0F11487.5YR1
NT	0F6751.5TADD4	0F6751.5TADD4 0F6751.5TADD5	0F6751.5TADD4	0C6751.5TREV2	0C18567.5T	0C19638.59870T	0F6751.5TADD4	0F17528.5T 0F20906.5TADD1*	0F11487.5TR1
NU	0F6751.5NADD4	0F6751.5NADD4 0F6751.5NADD5	0F6751.5NADD4	0C6751.5NREV2	0C18567.5N	0C19638.59870N	0F6751.5NADD4	0F17528.5N 0F20906.5NADD1*	0F11487.5NR1

*9WPS Only

OTHER APPROVALS/STANDARDS THAT WINTERS ADHERES TO

ASME B40.1
CAN. DEPT. OF DEFENSE
FCI
NATO
U.S. SDWA
U.S. NAVY
U.S. DEPT. OF DEFENSE
U.S. COAST GUARD

Notes

Notes

Notes

Pressure Conversion Table

Dial Scale	psi	kPa	kg/cm^2	cm of H_2O	feet of H_2O	inches of Hg	mm of Hg	inches of H_2O	ounces per square inch	atmosphere	bar	mbar	MPa
psi	1	6.894757	0.070306958	70.306927	2.306723	2.03602	51.71486	27.68068	16	0.0680460	0.06894757	68.9476	0.00689
kPa	0.1450377	1	0.01019716	10.19745	0.3345618	0.29522997	7.500610	4.01472	2.320603	0.009669235	0.01	10	0.001
kg/cm^2	14.223343	98.06694	1	1000.026	32.809312	28.95901	735.5588	393.711806	227.57349	0.967841596	0.98066494	980	0.09806
cm of H_2O	0.0142229	0.0980634	0.00099997	1	0.032808	0.0289581	0.7355372	0.3937	0.227566	0.000967814	0.000980634	0.9806	0.000098
feet of H_2O	0.433515	2.968961	0.03047912	30.480	1	0.882646	22.4192	12	6.93624	0.02949896	0.02968961	29.689	0.00298
inches of Hg	0.4911542	3.386389	0.0345316	34.53253	1.132957	1	25.4	13.595484	7.85847	0.0334211	0.03386389	33.8639	0.00386
mm of Hg	0.0193368	0.1333225	0.00135951	1.359554	0.0446046	0.039370079	1	0.535255	0.3093888	0.0013157895	0.001333225	1.33322	0.00013
inches of H_2O	0.03612628	0.2490819	0.00254219	2.54	0.08333	0.0735539	1.8682683	1	0.578020	0.00245825	0.002490819	2.49089	0.000249
ounces per square inch	0.0625	0.4309223	0.004394308	4.394308	0.14417	0.12725125	3.23218	1.73004	1	0.004252875	0.004309223	4.309	0.0004309
atmosphere	14.6960	101.32535	1.033231	1033.2633	33.8995	29.9213	760	406.794	235.136	1	1.0132535	1013.25	0.1013
bar	14.5038	100	1.019716	1019.7466	33.4833	29.5300	750.0626	401.8596	232.0608	0.986923	1	1000	0.1
mbar	0.0145	0.1	0.001019	1.019	0.03456	0.02953	0.75006	0.40146	0.23206	0.00099	0.001	1	0.0001
MPa	145	1000	10.197	10197.45	334.56	295.299	7500.61	4014.74	2320.603	9.669	10	10000	1

How to use Winters' conversion table:

1. Find the COLUMN with the unit of measure you want to convert from and move down that COLUMN until you find the number "1"
2. Move horizontally within the same ROW to find the Conversion Factor
3. Multiply the Conversion Factor (number in the box) by the amount you are changing from to get the pressure in the scale you are seeking (e.g. 50 bar to be converted to psi scale: 1 bar equals to 14.5038 psi (Conversion Factor), so 50 bar equals to 725.19 psi)

Use Winters' Converter online: www.winters.com/converter.htm

WINTERS Since 1953

WINTERS INSTRUMENTS

MANUFACTURER OF INDUSTRIAL INSTRUMENTATION

Winters Instruments is a global manufacturer of premium quality pressure and temperature instrumentation, with distribution partners in over 90 countries. Please contact us for your nearest Regional Manager.

Corporate - Canada
Winters Instruments
121 Railside Road
Toronto, Ontario
M3A 1B2
Tel: 416-444-2345
1-800-WINTERS
Fax: 416-444-8979
sales@winters.com

Canada - Calgary
Winters Instruments
3125-16 Street NE
Calgary, Alberta
T2E 7K8
Tel: 403-723-6645
1-800-WINTERS
Fax: 403-723-6647
calgary@winters.com

USA - Houston
Winters Instruments
5400 W. Sam Houston Pkwy N.
Houston, Texas
77041
Tel: 281-880-8607
1-800-WINTERS
Fax: 281-880-8614
usasales@winters.com

USA - Buffalo
Winters Instruments
Airport Commerce Park
455 Cayuga Rd., Suite 650
Buffalo, New York
14225
Tel: 716-874-8700
1-800-WINTERS
Fax: 716-874-8800
usasales@winters.com

Asia - Shanghai
Winters Instruments
Shanghai WitHub Hi-Tech
Business Center Suite 308
No. 333 Hongqiao Road
Shanghai 200030 China
Tel: 86-21-6104-2610
Fax: 86-21-6104-2615
asiasales@winters.com
www.wintersasia.com

Latin America
Winters Instruments
Lamadrid 121
Los Troncos del Talar, B1608CEC
Buenos Aires, Argentina
Tel: 54-11-4715-3036
latinsales@winters.com
www.winters.com.ar

Europe - Middle East - Africa
Winters Instruments
Dubai Airport Free Zone
6WB G50
Dubai, United Arab Emirates
Tel: 971-4295-9177
Fax: 971-4295-9177
emeasales@winters.com

Distributed by:

Download Winters' literature at www.winters.com
Winters Instruments is ISO 9001 Registered

07/19
MKT755